REPORT

Field Evaluation of Recycled Plastic Lumber (RPL) Pallets

To

Ohio Department of Natural Resources, Department of Energy, Ohio Field Office (Fernald Environmental Management Project)

August 1997

Battelle
Putting Technology To Work

FIELD EVALUATION OF RECYCLED PLASTIC LUMBER (RPL) PALLETS

Final Project Report

by

P. Krishnaswamy, C. R. Miele, R. B. Francini, K. Yuracko*, and P. Yerace**

Battelle
505 King Avenue
Columbus, OH 43201-2693

Client:	Ohio Department of Natural Resources, Department of Energy, Ohio Field Office (Fernald Environmental Management Project)
Period of Performance:	January 1996 -May 1997
Project Monitors:	Ms. D. Stusek, ODNR Mr. P. Yerace and Mr. T. Baillieul, DOE Ms. A. Rhodes, FEMP
Battelle Project Manager and Principal Investigator:	Dr. Prabhat Krishnaswamy Senior Research Scientist Engineering Mechanics Group
Other Participants:	The Plastic Lumber Company, Akron, OH
ODNR Contract Number:	Y60072; Y70035
Battelle Project Number:	G 002867

Oak Ridge National Laboratory, Oak Ridge, TN
** Department of Energy, Fernald, OH

CONTENTS

CONTENTS (Continued)

Page

CONTENTS (Continued)

Page

Figures

CONTENTS (Continued)

Page

CONTENTS (Continued)

Tables

1.0 INTRODUCTION AND BACKGROUND

1.1 Overview of Plastics Recycling

One significant component of the waste stream, discarded plastic products and packaging, continues to be a growing portion of the municipal solid waste (MSW). Plastics in MSW have grown from 400,000 tons in 1960 to 19.8 million tons in 1994. The U.S. Environmental Protection Agency (USEPA) estimates that by the year 2000 the amount of plastics thrown away will increase by almost 50 percent. As detailed in the EPA report "Characterization of Municipal Solid Waste in the United States: 1995 Update" [Ref. 1] plastics contribute 9.3 percent by weight to the total waste stream. Only 4.7 percent of this total is currently recovered. More importantly, due to its low density, the volume of plastics in landfills is almost one-fourth of the total volume.

The adoption of an Identification Code '1' through '6' by manufacturers of plastic products and packaging has greatly enhanced the recovery, characterization, and sorting of the variety of plastics in the waste stream. Six polymers constitute the majority of plastics that can be recycled. These polymers have the following codes:

1 - Polyethylene terephthalate (PET)
2 - High Density Polyethylene (HDPE)
3 - Polyvinyl Chloride (PVC)
4 - Low Density Polyethylene (LDPE)
5 - Polypropylene (PP), and
6 - Polystyrene (PS)

Other types of plastics (layered multi-materials as well as some that are used in durable goods), fall under Type-7.

Figure 1 shows the various steps in the materials flow diagram for plastics recycling. There has been considerable work done in characterizing the quantity and types of plastics in different waste streams, collection methods, separation, sorting as well as technologies for processing post-consumer mixed plastics (Refs. 2-6). The focus in recent years has been the development of markets for recycled plastic products, which constitutes the second half of the material flow diagram cycle (Processing through Product Recyclablity) shown in Figure 1.

One key product that holds significant promise for plastics recycling to be both technically feasible and economically viable is Recycled Plastic Lumber (RPL). An overview of the RPL industry, its importance to the State of Ohio, and a review of the various manufacturing techniques and characteristics of RPL are presented in detail in References 7 and 8. For brevity these studies, also conducted at Battelle, shall not be repeated in this report.

The contents of this report form the second phase of a two-phase pilot project on developing specifications and standards for a product fabricated from RPL. Such standards and specifications are needed to prepare procurement guidelines for state and federal agencies interested in purchasing products made from recycled materials. The first phase focused on establishing a procedure to evaluate RPL products, such as pallets, in a laboratory setting while this phase focuses on field evaluation of RPL pallets in service. This effort is critical in the development of new markets for RPL products. A brief summary of the findings from Phase 1 of this effort is presented next.

1.2 Summary of Phase 1 ODNR Study on Recycled Plastic Lumber (RPL) Pallets

The Pilot Project titled "Evaluation of Recycled Plastic Lumber Pallets" [Ref. 7] was undertaken between 1994 and 1996 to establish procedures to develop standards, specifications and procurement guidelines for RPL products. A shipping pallet was selected for this study as it is a structural application of RPL, and has the most potential for converting large quantities of plastic waste into a product that can be purchased by both state and federal agencies.

In this work a detailed survey was first conducted of the status of the RPL industry in Ohio. Next, the state of the art in manufacturing different types of RPL was summarized along with current markets for the materials. The findings showed that RPL is used primarily in non-load bearing uses such as picnic tables, trash receptacles, parking stops, etc. Amongst the Ohio manufacturers The Plastic Lumber Company from Akron was chosen as a partner in this project to supply all the RPL materials and pallets required in this evaluation.

The first step in the evaluation involved selection of one pallet design amongst the several hundred variations that exist in the marketplace. A true, four-way entry, block-type pallet with dimensions of 48"x 40", most commonly used by several industries, was selected in this study. Figure 2 shows a schematic of this type of pallet.

The evaluation of the RPL pallets involved three steps:

- Determining the mechanical properties of the RPL material that determine the structural behavior of the pallets. These included flexural and compressive properties of the RPL boards.

- Conducting full-scale tests on the fabricated pallets to determine their performance according to standards specified for wooden pallets. These standards are enumerated in Appendix A of this report also.

- Analyzing and predicting the mechanical behavior of the pallets in full-scale tests using advanced numerical methods such as finite element analyses.

The mechanical properties of RPL were shown to be critical in the structural performance of the pallets in the full-scale tests. It was also shown that due to the heterogeneous nature of the cross section of RPL, the analytical prediction of the full-scale tests is very complex and hence there was a discrepancy between the experimental data and the analytical predictions.

Several key recommendations were made regarding the manufacture of RPL and the fabrication of pallets. Also, an outline for the evaluation of RPL pallets in a field environment was developed as part of the study. This outline consisted of the following tasks and formed the original scope for Phase 2 work. However the scope of the effort described below had to be modified after the site selection for field evaluation was complete. The modifications to the scope are discussed in Section 3.2,

Task 1 - Comparison of Molded and Fabricated RPL Pallets: The first task recommended was to compare the technologies for manufacturing plastic pallets. The two competing methods currently include pallets made from RPL and those molded directly from the recycled polymer melts into pallets through compression molding. Existing data on manufacturing methods, equipment costs, pallet performance, repairability and recyclability of pallets produced using the two methods should be compared.

Task 2 - Pallet Design and Evaluation: There are several possible configurations and pallet designs that currently exist for both wooden and plastic materials. The load bearing capacity of several 48x40-inch pallets, the size most frequently used, need to be compared using numerical simulation and material properties of RPL. The dimensions, designs, and other parameters need to be optimized so as to maximize the load carrying capacity of the pallet.

Task 3 - Field Performance Evaluation of Pallets: A specific site, such as a Department of Energy facility, that consumes pallets in large quantities should be involved in a study to evaluate the behavior of both RPL and molded pallets under field service conditions. The RPL pallet design considered to be most suitable for the sites should be used. A plan for where and how the trial pallets will be used including methods to track the movement and performance of the RPL pallets has to be established in this work.

As part of the field evaluation, some full-scale tests of pallets would need to be conducted. However, in any future full-scale experiments, complete detailed load-deflection data at various location in the pallet need to be recorded for more reliable comparison with analytical predictions.

Task 4 - Life Cycle Cost Analysis: A comparison of life-cycle cost of wood versus RPL pallets is needed. Therefore, the life-cycle cost of using RPL pallets needs to be

estimated during the field service evaluation. The estimate should include manufacturing costs, initial purchase price, pallet repairability and recyclability cost, disposal and environmental costs.

Task 5 - Performance Based Specifications and Procurement Guidelines: The results of the field evaluation have to be used to develop a performance-based specification for RPL pallets for DOE site applications. These should also include the lower bound for the mechanical properties of RPL and fabrication procedures that need to be used to manufacture the pallet type. Such specifications can then be used by ODNR and other agencies of the federal/state government to prepare a procurement guideline for RPL pallets and implement a plan to purchase these recycled plastic pallets, thus creating and significantly expanding the markets for RPL.

1.3 Potential Uses for RPL Pallets at Department of Energy Sites

The U.S. Department of Energy (DOE) operates numerous sites across the country, each of which has extensive use for pallets to ship, store and rack materials. The materials shipped and environment under which the pallets are used can be hazardous, toxic and/or radioactive. Hence, the pallets at these sites have the potential to be contaminated quite severely. Additionally, the structural requirements on these pallets can also be severe as they can be use to move and store 55 gallon drums, or super-sacks containing hazardous waste in several DOE sites at which decontamination and decommissioning (D&D) is in progress.

In order for these pallets to be 'authorized-released' [Ref. 9] they may require extensive cleaning. The alternative to cleaning and authorized-release of these pallets is to treat them as hazardous waste also and bury them per the prescribed procedure. This can be quite expensive as it involves both transportation and other costs. Several new initiatives within DOE focus on evaluating alternative procedures which -

- allow for access to the inaccessible surfaces of the RPL pallet due to their construction and fabrication, and

- create a market for RPL pallets, provided they meet performance requirements.

With the above initiatives, there has been considerable interest at the DOE to conduct some field evaluation of RPL pallets. The RPL pallets are not susceptible to contamination, can be disassembled easily, can be cleaned of any surface contamination and authorized-released. Additionally, the procurement of RPL pallets would be promoting the affirmative procurement practices being implemented by the US EPA [Ref. 10] in using materials that are both recycled and recyclable.

2.0 OBJECTIVES

Given the above background, the objectives of this project follow the tasks recommended in Section 1.2 [Ref. 7]. Specifically, the objectives were to:

- Determine the current specifications for pallets to transport and store low-level waste (LLW),
- Select a DOE site most suitable for evaluating the RPL pallets in service,
- Design RPL pallet that meets the requirements of the DOE,
- Evaluate material properties for the RPL material used in the pallets using as manufactured specimens,
- Conduct full-scale tests on pallets as per existing specifications to determine performance characteristics,
- Evaluate the RPL pallets by using them under several 'typical service conditions' at the DOE site, and
- Conduct a first level life-cycle analysis of various options for pallets at the DOE site.

The approach to accomplishing the above objectives and the results of the evaluation of RPL pallets in the field are discussed in the following Sections 3.0 and 4.0.

3.0 APPROACH

The approach to meeting the above objectives involved the selection of a site to conduct the field evaluation. Then, the scope of the work outlined for this work had to be modified to meet the needs of the site. Finally, the parameters that need to be studied during the field evaluation had to be defined. These are detailed next.

3.1 Site Selection for Field Evaluation

The first activity in this project was to identify a site managed by a federal agency that would cooperate with this project team and work toward the objective of evaluating the pallets under "realistic field service conditions." The criteria used for selecting a site for the pallet evaluation included the following:

- The pallets used on site should be subjected to high performance applications both from structural response and exposure to low level waste,
- The site should have a pro-active 'pollution prevention' and recycling initiative in their procurement procedures,

- Site personnel should be available for monitoring, tracking and recording pallet performance,
- Several internal locations within a site should be available for a variety of uses for pallets including, loading, storage, racking, and hazardous (radioactive) conditions,
- The pallets should be used to move/store material within the site only, thus all operations on each pallet could be tracked and recorded,
- The project manager should be able to disseminate the information from this program to other federal facilities along with recommendations regarding the use of RPL pallets,
- The federal site should be in Ohio or in a neighboring state for ease of project coordination, data gathering and exchange.

Three potential federal sites in Ohio were considered for this project. These were:

- The U.S. DOE facility in Mound, Ohio,
- The U.S. DOE, Fernald Energy Management Project (FEMP), and
- The Wright Patterson Air Force Base (WPAFB) in Dayton, Ohio.

The visit to Mound by Battelle, ODNR and the Plastic Lumber Company (PLC) indicated that this site while wanting to cooperate on this project was not suitable as they did not purchase many high-performance pallets. The same was the case with the WPAFB facility. Both these sites used the pallets from incoming shipments for their internal use as well as for shipping goods from their respective sites. Both sites, in fact, had an excess of wooden pallets that needed special procedures for disposal.

After two visits to Fernald by Battelle, ODNR and PLC staff, it was clear that this facility met all the criteria listed above and would provide an ideal location for evaluating RPL pallets in controlled ‘field service conditions’.

3.2 Modification to Project Scope

After extensive discussions with DOE-Fernald and ODNR staff, certain changes in the project scope were deemed necessary. These changes were needed for a more comprehensive evaluation of RPL pallets that would be useful for DOE. The modification to the various tasks outlined in Section 1.2 above are as follows:

- Task 1 - Comparison of Molded and Fabricated RPL Pallets: This task was eliminated from the program as molded pallets, which have problems with repair and ease of disassembly, were not of interest to DOE-Fernald.

- Task 2 - Evaluation of Pallet Design: The DOE-Fernald specifications for pallet size involves a square, 48”x48”, 2-way entry stringer type pallet which is different from the standard 48”x40” 4-way entry block pallet. The only specifications available for wooden pallets at DOE-Fernald are provided in Appendix B. DOE-Fernald also uses galvanized metal pallets that can be cleaned after use. Figure 3 shows photographs of typical wooden and steel pallets used on site.

  The load carrying capacity and configuration for loading needs to include 4 x 55-gallon drums, or 3 x 85-gallon drums, or 1 x 110 gallon drum. Figure 4 shows photographs of a typical configuration of drums on a pallet. The most severe load case involves each pallet carrying 4 x 55-gallon drums each weighing 1600 lbs racked three-high yielding a total weight of 19,200 lbs on the lower-most pallet. Any proposed design has to sustain this level of load for storage. The maximum load on the pallet during movement is 6400 lbs.

  Full-scale tests on the RPL pallets needed to be conducted by Battelle through a subcontract at Michigan State University to ensure that the pallets had adequate load-carrying capacity.

- Task 3 - Field Performance Evaluation of Pallets: The original plan included primarily structural evaluation of the RPL pallets to ensure that its integrity was not affected by its use on site and that it would not sustain permanent damage during normal use. Several additional characteristics of RPL pallets needed to be investigated thus expanding the scope of this task. These included:

  - Multiple site evaluation for different uses for pallets
  - Radiation Testing - surface and volumetric decontamination after use
  - Combustibility and fire safety characteristics
  - Ease of disassembly
  - ‘Authorized-release’ issues after use (for recyclablity/disposal)

- Task 4 - Life Cycle Analysis: DOE-Fernald and Oak Ridge National Laboratory (ORNL) have developed a comprehensive method based on life cycle analysis to evaluate and compare competing products and processes. This life cycle analysis methodology is to be used to compare RPL pallets with wooden and galvanized steel pallets that are currently used at the Fernald site. Battelle will need to coordinate this task with DOE staff This analysis is more rigorous than what was originally planned, thus expanding the original scope of this work.

- Task 5 - Performance Based Specifications and Procurement Guidelines: This task remained unaltered.

The above changes would result in a more comprehensive evaluation of RPL pallets that could potentially be included in EPA's comprehensive procurement guidelines (CPG) for recycled pallets. A copy of the current EPA CPG specification for pallets is provided in Appendix C.

3.3 Approach to Field Evaluation of RPL Pallets at Fernald

With the above changes in the scope of the original program, the activities in the principal task of the project, Task 3 - Field Evaluation, were planned as follows. A limited number of six pallets would be introduced into service at two or three locations on the site. These locations were:

- Former Production Area-where the pallets could be exposed to low level radiation,
- Training Area-where operators are trained on fork lifts and therefore the pallets see the 'most severe' field conditions,
- Northstar - which is a 'clean area' warehouse where items other than drums are handled and moved using pallets.

The pallets would be subjected to three types of loading depending on the site. These would include:

- Transporting drums to evaluate effects of continuous use,
- Transporting other materials and evaluating their effects,
- Racked storage (maximum of three levels) to evaluate the effects of heavy-duty loads in a hazardous environment. The total load on any pallet would not exceed 19,200 lbs.

The list of parameters to be tracked for each pallet during the evaluation included the following:

- date and time of use
- pallet handling equipment used
- application type (indoor/outdoor)
- total of load on pallet
- load configuration (number of drums, arrangement of drums and racking)
- number of turns
- approximate distance moved during turn
- duration of storage
- type of material stored on pallet

Parameters to be tracked during the evaluation included:

- excessive (unacceptable) deflection of stringers
- visual damage inspection
- problems with loading/unloading due to impact
- photographs of pallets in use and of any damage to the pallet

At the end of the field evaluation of the pallets, additional characteristics that would be assessed included:

- ease of disassembly of pallets
- radiation test results
- criteria for authorized-release of pallets.

4.0 RESULTS OF THE RPL PALLET EVALUATION

Once the plan for field evaluation of pallets was finalized as described above, the tasks for designing the RPL pallets to meet the DOE-Fernald requirements, evaluating the new design with full-scale tests, and then implementing the field evaluation procedure were undertaken. Simultaneously, a procedure to conduct life-cycle cost analysis of various pallet options at the site was established with appropriate input from ORNL.

As stated above, Task 1, which involved a comparison of molded versus fabricated RPL pallets was eliminated after discussions with DOE-Fernald staff about their requirements. The results of the activities in the other tasks are presented next.

4.1 Task 2 -Pallet Design and Laboratory Evaluation

4.1.1 Optimized Pallet Design

The structural requirements of the RPL pallets by DOE-Fernald presented in Section 3.2 are quite severe as compared with the pallet design used in the Phase 1 effort [Ref. 7]. Hence, several modifications to the existing pallet design were made by Battelle and The Plastic Lumber Company (PLC) based on past experience with heavy-duty pallets. The engineering drawings for the final design of the RPL pallet used in the field evaluation are shown in Figures 5a-c. As seen, the load-bearing surface of the pallet consists of 2”x6” dimensional RPL instead of the usual 2”x4”. Also, this is a two-way-entry, stringer-type, pallet with four, 4”x4” stringers. The four-drum loading configuration is shown in Figure 5c. Bolts used for fabricating the pallets had to meet the specifications from DOE-Fernald. The bolt specifications are given in Appendix D. Figure 6 shows a photograph of the assembled RPL pallet. Based on past experience, this design was considered to be robust enough for the site requirements. However, further full-scale testing was deemed necessary in order to ensure that the load carrying requirements were met. These results are discussed next.

4.1.2 Full-Scale Test Results on the RPL Pallet

Four RPL pallets were fabricated by PLC as per the designs above and sent to the School of Packaging at Michigan State University for full scale testing. The following tests were conducted on the pallets:

1. Stiffness and Flexural Strength
2. Vibration Testing of Pallet Loads
3. Lateral Stability and Diagonal Rigidity of Pallets Due to Drops
4. Impact Test of Leading Edge, Blocks and Posts
5. Compression Test of Pallet with Four, 55-gallon drum loading configuration

Details of the tests, the relevant ASTM test method and results are provided in the MSU report in Appendix E. The uniformly distributed load compression test between platens is shown in the photograph, Figure 7a. The load-deflection curve from this compression test shown in Figure 7b indicates a maximum load in excess of 30,000 lbs with a minimal deflection of 0.2 in. Figure 8a and 8b show the flexural (bending) tests with an air bag (the most severe case of flexure) and under four point bending respectively. The flexural stiffness and loads from these two tests are shown in Figures 9a and 9b respectively.

Figure 10 shows the load-deflection curve for the pallet under compression using the four 55-gallon drum load configuration. Drum loading was simulated using four wooden rings with an outside diameter of 24”, width of 1” and thickness of 0.75”. As seen, the maximum load carrying capacity in this test configuration was 20,355 lbs which exceeds the requirement of 19,200 lbs by DOE-Fernald. The pallets also passed the vibration, drop and impact tests performed as detailed in Appendix E.

4.1.3 Simulation of Full-Scale Tests

As in the past study [Ref. 7], an attempt was made to simulate the full-scale behavior of the pallets using the RPL material properties and advanced numerical methods such as Finite Element Analysis (FEA). The mechanical properties required of RPL for the computer simulation include flexural properties for the boards (2"x6”) and the compression properties of the stringers (4”x4”). Typical flexural and compressive stress-strain curves conducted using draft ASTM test methods X-20-24 [Ref. 10] and X-20-23 [Ref. 11] are shown in Figures 11 a and 11 b respectively.

A three-dimensional FEA model of one-quarter of the pallet (from symmetry considerations) is shown in Figure 12a. The loading and boundary conditions for the four-point bend load configuration (Figure 8b), along with the material properties in Figure 11, were used in the simulation. Figure 12(b) shows a simulation of the deformed pallet. The results of the computer simulation indicated the maximum load to be 11,250 lbs versus an experimental value of 4,200 lbs. The discrepancy between the experiment

and the analysis is quite considerable. This level of discrepancy is not unexpected as the RPL is assumed to be homogenous and isotropic in the simulation while in reality it has a skin and foam core that is not homogenous in nature with regard to its stiffness and strength. The FE analysis ignores the foam core and assumes the entire cross section to have the same properties as that of the skin. A better procedure to evaluate RPL structures analytically is being developed in a separate effort by the authors at Battelle.

4.2 Task 3 -Field Evaluation of RPL Pallets

Six pallets fabricated to the design presented in Section 4.1 were sent to DOE-Fernald for field evaluation. These were distributed among three locations within the site as follows:

Location 1 - Former Production Area: 3 pallets
Location 2 - Training Area: 2 pallets
Location 3 - Northstar (Warehouse) Area: 1 pallet

Location 1 - Former Production Area : Three of the pallets were used at this former production location where the pallets could be exposed to low level radiation. The pallets were placed in service from May 15,1997 through June 16,1997. The three pallets were in a racked 'static load' configuration with four 55-gallon drums on each pallet. The material in the drums were low-level waste residues and the pallets were place outdoors on a concrete floor. Figure 13a shows a photograph of the racked configuration used to store the drums.

The total load on the bottom pallet was 9006 lbs. The distribution of loads on the three racks is shown in the Field Evaluation Report for Location 1 in Appendix F-l. Also provided in this report is the condition of the pallet at the beginning and at the end of the evaluation. As indicated in the report, the pallets performed "very satisfactorily". A visual inspection showed that there was no evidence of damage or cracks as a result of the sustained load. At the load levels, the deformations in the pallets were acceptable.

Figure 13b shows a photograph of the pallet after the evaluation. As seen, the pallet is intact after use at this location. At the end of this period the top most pallet was removed from service and checked for radioactive contamination. No contamination was evident as described in the Radiological Report (Appendix G), and the pallet was sent for authorized-release.

Location 2 - Training Area: The training facility was supplied with two pallets and were subjected to 'dynamic loading', that is, they were used to move drams from one place on the location to another using fork trucks. The facility used to tram operators of forklifts subjected the pallet to severe use with constant dragging and pushing of the pallets and the materials on it. Drums weighing about 4000 lbs were stacked and unstacked on these

pallets routinely. Two reports on the pallet performance, one at the mid-point of the evaluation, and the other at the end, are provided in Appendix F-2.

Again, the pallet performance at this location showed no wear and tear from use, and handled very well with forklift operations. No weaknesses were noted in the pallet performance. The surface of the pallet was noted to be more 'slippery' either in wet or dry condition than wooden pallets.

Location 3 - Northstar Area: The last pallet in the evaluation was used at this location for handling and moving 'dynamic' loads other than drums. The pallet was used to transport office equipment, desks chairs etc. using fork trucks. The evaluation reports from this location are provided in Appendix F-3. Figure 14a shows a photograph of the pallet in use with a forklift. Figure 14b shows the pallet after use. Apart from normal wear of the loading surface, the pallet was intact.

Hence, at all three locations, the performance of the pallet exceeded the requirements of the site.

4.3 Task 4 - Life Cycle Analysis (LCA)

DOE-Fernald along with the Oak Ridge National Laboratory (ORNL) have developed a formal procedure for the life-cycle analysis of products and processes. This procedure, detailed in References 13 and 14, accounts for both tangible and intangible factors associated with various alternatives for recycling and disposal at DOE sites and provides a formal framework for evaluating and comparing alternatives.

4.3.1 Overview of Life Cycle Analysis Methodology

The life cycle analysis methodology is divided into three phases: the Threshold Phase, the Life Cycle Analysis Phase, and the Decision Phase. In the first phase, the alternatives are evaluated based on the "threshold criteria" of protectiveness of human health and the environment, compliance with applicable or relevant and appropriate requirements (ARARs), and life cycle cost (LCC). Alternatives which fail to meet minimum standards in terms of protectiveness of human health and the environment and compliance with ARARs, or which are not within 25 percent of the LCC of the lowest cost alternative, are eliminated from further consideration.

In the second phase (Life Cycle Analysis Phase), the alternatives which meet the threshold criteria are evaluated on a comprehensive set of performance measures,. and the results are tabulated in a Decision Summary Matrix. In the third phase (Decision Phase), the alternatives are ranked using multiattribute decision analysis, in which the results of the Analysis Phase are combined with weighting factors to produce an aggregate total

score for each alternative. The alternative with the highest score becomes the preferred alternative under this methodology.

The application of the life cycle analysis methodology to pallets is presented below.

4.3.2 Phase 1: Threshold Phase

The life cycle analysis methodology begins with a LCC comparison of alternatives which meet threshold criteria of protectiveness of human health and the environment, and compliance with ARARs.

The basic definition of LCC in the DOE methodology is as follows: LCC includes the direct, indirect, recurring, nonrecurring and other related costs incurred or estimated to be incurred in the design, development, production, operation, maintenance and support of an asset throughout its anticipated useful life span and through final disposal. Revenues such as user fees and salvage receipts should be included as an offset to the cost.

The steps in the life cycle cost analysis for pallets are as follows:

1. Identify the alternatives: In the case of pallets at DOE-Fernald, the alternatives for evaluation are:

   - Wooden pallets,
   - Galvanized steel pallets, and
   - Recycled plastic lumber (RPL) pallets.

2. Identify the life-cycle duration for each alternative: This step involves determining both the useful design life of the pallet as well as the time duration during which the site needs pallets. If the time duration for the need exceeds the design life, then costs for fulfilling the need beyond the design life must be included in the LCC, that is, cost of purchasing new pallets, Since DOE-Fernald is on a 10-year shutdown plan, the time duration for pallet needs for this study is assumed to be 10 years. The estimated design life for the pallet alternatives are as follows:

Pallet Type	Design Life, years
Wood	2
Steel	10
RPL	5

3. Identify the financial costs for each pallet type: The costs for the pallets fall into three major categories: acquisition, maintenance and repair, and end-of-life cost. The costs for each alternative are as follows:

- Acquisition (Initial) Cost: The cost of purchasing new pallets are:

Wood -	$20
Steel -	$160
RPL-	$275

  These data on costs were obtained from the records at DOE-Fernald on past purchases of pallets and from the Plastic Lumber Company on the price for supplying pallets in large quantities (200 or more).

- Maintenance and Repair: Some assumptions need to be made regarding frequency of repair and the cost of each repair for the various alternatives. It is assumed that the wooden pallets with a design life of 2 years are not repaired and are simply disposed of at their end-of-life. The metal pallets are assumed to be repaired once, half-way through their design life, at a cost of $25. Some of the boards on the RPL pallet may need to be replaced once during its design life; repair of RPL pallets is assumed to cost $14.

- Disposal or Recycling Cost at End-Of-Life: At the end of life both the wooden and the galvanized steel pallets are assumed to be disposed of at the Nevada Test Site (NTS) in IS0 containers. IS0 containers are a standard containers with internal volume of 1174 cf and external volume of 1350 cf. A 20 percent bulk density factor was applied for loading the pallets into the IS0 container. The disposal cost per pallet was assumed to be $503. The RPL pallets are assumed to be disassembled, cleaned, and 'authorized-released' for recycle at a net cost of $50.

Because this is a comparative cost analysis, costs common to all alternatives, such as the salaries of the workers using the pallets, were not included because they do not discriminate among alternatives.

4. Identify costs in each year: The costs incurred during each year of the project are identified. Tables 1 through 3 show the annual costs for wooden, galvanized steel and RPL pallets, respectively, for a 10-year project life.

5. Identify discount rate: For a 10-year project, the real discount rate, R, is 3.5 percent as specified by the Office of Management and Budget Circular No. A-94, February 1997 [Ref. 15].

6. Calculate LCC: The most common method of LCC analysis uses the net present value (NPV) method. In this method, the costs in each year are reduced to a common basis using present worth (PW) calculations, where

$$PW = (\text{Cost for Year } Y)/(l+R)^{Y-1}$$

where R is the discount rate and Y is the year. The total PW summed overall all years provides the LCC for the alternative.

The complete LCC calculations for the three alternatives under the above assumptions are shown in Tables 1 through 3.

Life Cycle Cost Results

The LCC for the three alternatives for a 10-year project life are presented below. Because the results are extremely sensitive to disposal cost, results are presented for two different disposal cost assumptions: $17.65/cf and $45/cf.

	Life Cycle Cost	
Pallet Type	$17.65/cf	$45/cf
Wooden	$1058	$2144
Galvanized Steel	$350	$538
RPL	$608	$608

Galvanized steel pallets are seen to be the lowest-cost alternative, at both a $17.65/cf disposal cost and a $45/cf disposal cost. Under the DOE life cycle analysis methodology, alternatives which fail to come within 25 percent of the LCC of the lowest cost alternative are eliminated from further consideration. For a disposal cost of $17.65, wood and RPL pallets do not fall within 25 percent of the LCC of the galvanized steel pallet. Thus, if the cost of disposal is $17.65/cf, galvanized steel pallets would be the preferred alternative. At the $45/cf disposal cost level, the LCC of RPL pallets does fall within 25 percent of the LCC of galvanized steel pallets.

4.3.3 Phase 2: Life Cycle Analysis

Alternatives which pass the initial threshold screening are evaluated on a comprehensive set of performance measures. The performance measures evaluated are: local public acceptance, environmental impact, institutional preference, and worker safety impact. Other performance measures such as public health impact are not included because they are not expected to discriminate among the alternatives. A scale of l-5 (5 is most desirable).is used to evaluate the alternatives on the institutional preference, local public acceptance, environmental impact, and worker safety performance measures. Table 4 shows the resulting Decision Summary Matrix for the pallet alternatives at DOE-Fernald.

A brief explanation of the elements in the Decision Summary Matrix follows. The RPL pallets have the highest score on institutional preference because the U.S. EPA has

included pallets made from recycled materials in its latest version of the Comprehensive Procurement Guidelines, Appendix C. Since galvanized steel could be made from recycled material it also has a high institutional preference rating. Being both recycled and recyclable, local acceptance for RPL is expected to be higher than for the alternatives. From an environmental impacts standpoint, problems of contamination and disposal of wooden and galvanized steel pallets make them less desirable alternatives than RPL pallets. Also, minor hazards associated with wooden pallets such as splinters and porosity (which absorbs radiation) pose a higher threat to worker safety than either metal or RPL pallets. A score of 4 is selected for wooden pallets and 5 for the other pallets because all of the pallets are safe, but RPL and steel are slightly superior on this performance measure.

4.3.4 LCA Phase 3: Decision Phase

Using weighting factors provided by DOE-Fernald, a multiattribute decision analysis was performed to determine the preferred alternative. The details of the multiattribute analysis of RPL and galvanized steel pallets are presented in Appendix H. (Wooden pallets were excluded from this evaluation because they fail to meet the 25 percent cost threshold.) The results of the multiattribute analysis indicate that, for a disposal cost of $45/cf, RPL pallets are the preferred alternative.

4.3.5 LCA Sensitivity Analysis

Sensitivity analyses demonstrate that the pallet life cycle cost is sensitive to three key variables: (1) the length of time pallets are needed; (2) the expected useful life of a pallet; and (3) the end-of-life cost (e.g. disposal cost; decontamination and authorized-release cost; recovery value, if any).

Figure 15 shows the strong dependence of life cycle cost on disposal cost. This calculation assumes pallets are required for a period of 10 years, and the wood, steel, and RPL pallets have a useful life of 2, 10, and 5 years, respectively. The calculation further assumes that wood and steel pallets are disposed of at NTS, while RPL pallets are decontaminated and authorized-released for reuse. Thus, the LCC of wooden and steel pallets increase with disposal cost, while the LCC of RPL pallets (which are not disposed of) does not change.

It is seen that RPL pallets cost less than wooden pallets for any disposal cost greater than 7$/cf. RPL pallets cost less than galvanized steel pallets for any disposal cost greater than 55$/cf. Under the life cycle analysis methodology described above (and using the weighting factors provided by DOE-Fernald), RPL pallets would be the preferred alternative any time they pass the 25 percent cost threshold requirement. The calculations described above indicate that RPL pallets fall within 25 percent of the LCC of galvanized steel pallets for any disposal cost greater than $38/cf. Thus, based on the

assumptions above, RPL pallets would be the preferred alternative when the cost of disposal exceeds $38/cf.

Figure 16 shows the life cycle cost as a function of the length of time pallets are needed at the site. In performing this analysis, a $45/cf disposal cost was assumed. It is seen that both steel and RPL pallets result in lower LCC than wooden pallets. The relative cost of steel and RPL pallets depends on the length of time the pallets are needed.

4.3.6 Conclusion from LCA

The life cycle analysis demonstrates that RPL pallets are a viable alternative for use in the DOE complex. Because the actual costs of use are dependent on a number of variables, sites are advised to consider RPL pallets for their own use and to perform their own evaluation using their unique site-specific data.

4.4 Task 5 - Specification for RPL Pallets

The results of the RPL pallet evaluation and the LCA presented in Sections 4.1 through 4.3 clearly indicate that these pallets are a viable option to existing products used at DOE-Fernald. The performance of the RPL pallets designed and fabricated as detailed in Section 4.1 is exceptionally good. The structural integrity and durability characteristics of RPL pallets were found to be excellent during the field evaluation. And, even though the RPL Pallets are not competitive on an initial cost basis, the LCA shows that they are economically acceptable options. This is because the disposal costs for contaminated material from other pallet types, e.g. wood, can be prohibitive in the long run. The Decision Matrix, Table 4, and the multi-attribute analysis (Appendix H) indicate that the intangible factors also favor the choice of RPL pallets at DOE-Fernald.

Based on the information and evaluation above, a specification for the purchase of RPL pallets for DOE-Fernald can be developed very easily. The specifications would include the following:

- Required minimum material properties of RPL, such as those shown in Figure 11,
- Suggested pallet design and fabrication method such as those provided in Figure 5 and Appendix D,
- Recommended uses for RPL pallets with load limits of 19,200 lbs in a three-level racked configuration and 6,400 lbs for transporting materials
- Some screening evaluations to ensure no radioactive contamination of the pallets at the end of life which permits authorized-release and recycling or reuse of the pallets such as those in Appendix G.

5.0 CONCLUSIONS AND RECOMMENDATIONS

Each of the objectives of this study listed in Section 2.0 were accomplished as detailed in Sections 3.0 and 4.0 of the report. The major conclusions of this study include the following:

- RPL pallets are a viable option for use within the DOE complex,
- Depending on the structural load bearing capacity needed, RPL pallets can be designed to meet the requirements of any particular site,
- Performance of the RPL pallets in laboratory evaluation met or exceeded the standards for wooden pallets,
- In the field evaluation of structural performance, the pallets met or exceeded the performance of wooden and galvanized steel pallets previously used on the site,
- The RPL pallets were not contaminated when used in former production facilities,
- The pallets could be disassembled readily for authorized-release by any site,
- The life cycle analysis indicated that RPL is clearly a viable option based on life-cycle-cost comparison of the various alternatives and other intangible factors set forth by DOE's LCA methodology [Ref. 13, 14],
- The LCA cost analysis is sensitive to both disposal costs and project life over which pallets are needed, and hence each site needs to conduct the LCA using site-specific data,
- As suggested by the PLC, the design of the pallet could be modified to include stops to increase the slip resistance of the load-bearing surface, Figure 17.

6.0 REFERENCES

1. Characterization of Municipal Solid Waste in the United States: 1995 Update, USEPA, November 1995.

2. Andrews, G.D. and Subramanian, P.M., Emerging Technologies in Plastics Recycling, ACS Symposium Series 513,1992.

3. Ehrig, R.J., Plastics Recycling, Hanser, New York, 1992.

4. Beck, R.W. and Associates, "Evaluation of Recycled Plastic Lumber for Marine Applications," EPA/600/R-93/166, September 1993.

5. Technical Reports from the Center for Plastics Recycling Research, Rutgers University, NJ, 1985-1993.

6. Hegberg, B.A. and others, “Technologies for Recycling Post-Consumer Mixed Plastics,” Center for Solid Waste Management and Research, Chicago IL, OTT-8, March 1991.

7. P. Krishnaswamy and others, “Evaluation of Recycled Plastic Lumber Pallets”, Battelle Report to Ohio Department of Natural Resources and Ohio Department of Development, February, 1997.

8. P. Krishnaswamy and D. Mangaraj, “A Review of the Manufacturing Processes and Characteristics of Recycled Plastic Lumber (RPL)“, Battelle Report to the Environment and Plastics Institute of Canada, November 1995.

9. Department of Energy Order 5400.5, “Radiation Protection of the Public and the Environment”, Federal Register 16268, March, 1993.

10. Federal Register, Volume 61, No. 217, November 7, 1996.

11. ASTM Draft Standard X-20-24 Standard Test Method for Flexural Properties of Unreinforced and Reinforced Plastic Lumber and Shapes, 1997.

12. ASTM Draft Standard X-20-23 Standard Test Method for Compressive Properties of Plastic Lumber and Shapes, 1997.

13. K. Yuracko, and others “ Applying a Life-Cycle Decision Methodology to Fernald Waste Management Alternatives”, Proceedings of the DOE Pollution Prevention Conference XII, July, 1996.

14. Decision Methodology for Fernald Scrap Metal Disposition Alternatives, Report prepared by Fluor Daniel Fernald and ORNL for U.S. DOE Fernald Environmental Management Project, April 1997.

15. Office of Management and Budget Circular No. A-94, February 1997

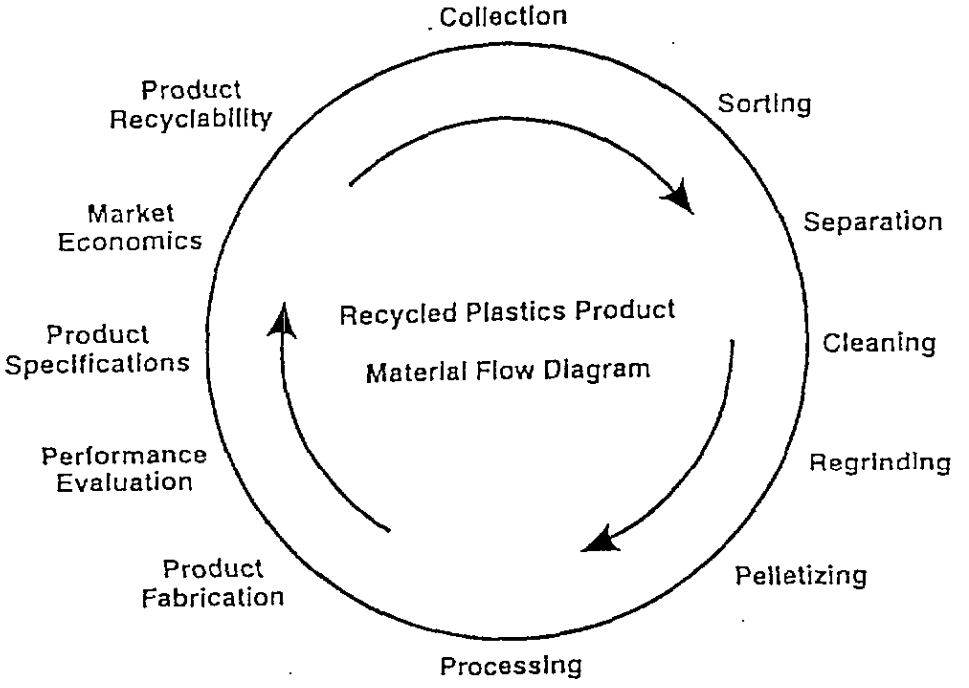

Figure 1. Material flow diagram for plastics recycling

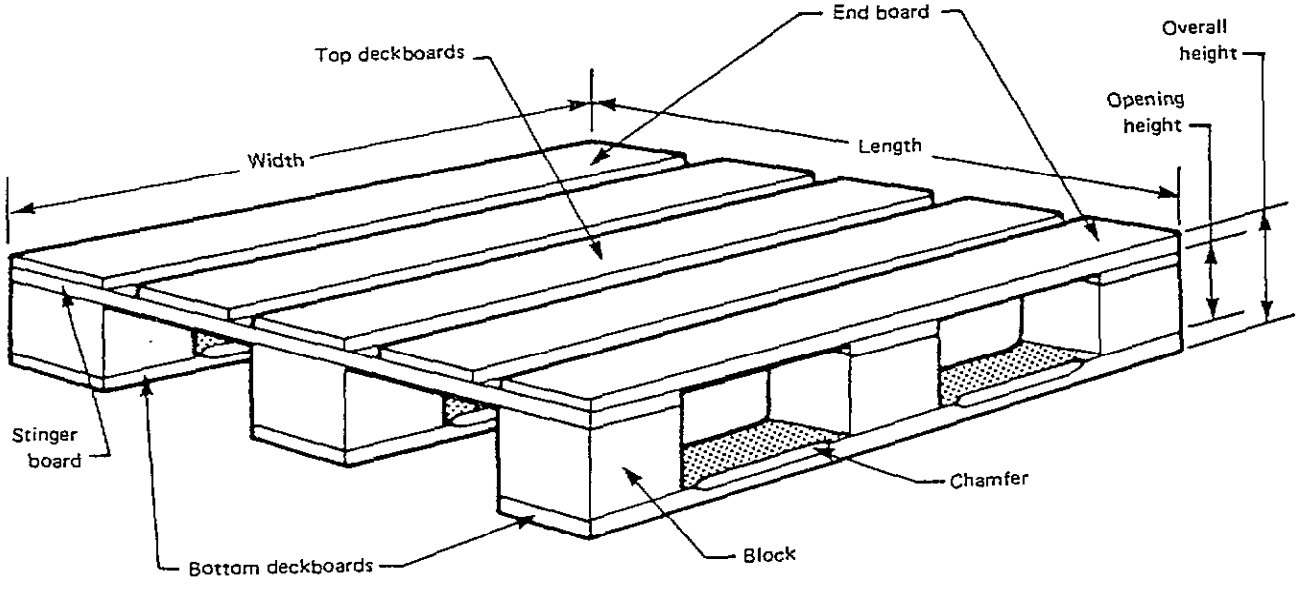

Figure 2. Sketch of a true, four-way entry block pallet

(a) Wooden

Figure 3. Photographs of typical pallets used at DOE-Fernald

(b) Galvanized steel

Figure 3. (Continued)

(a) Single drum

(b) Three drums

Figure 4. Typical configurations of 55-gallon drums on metal pallets

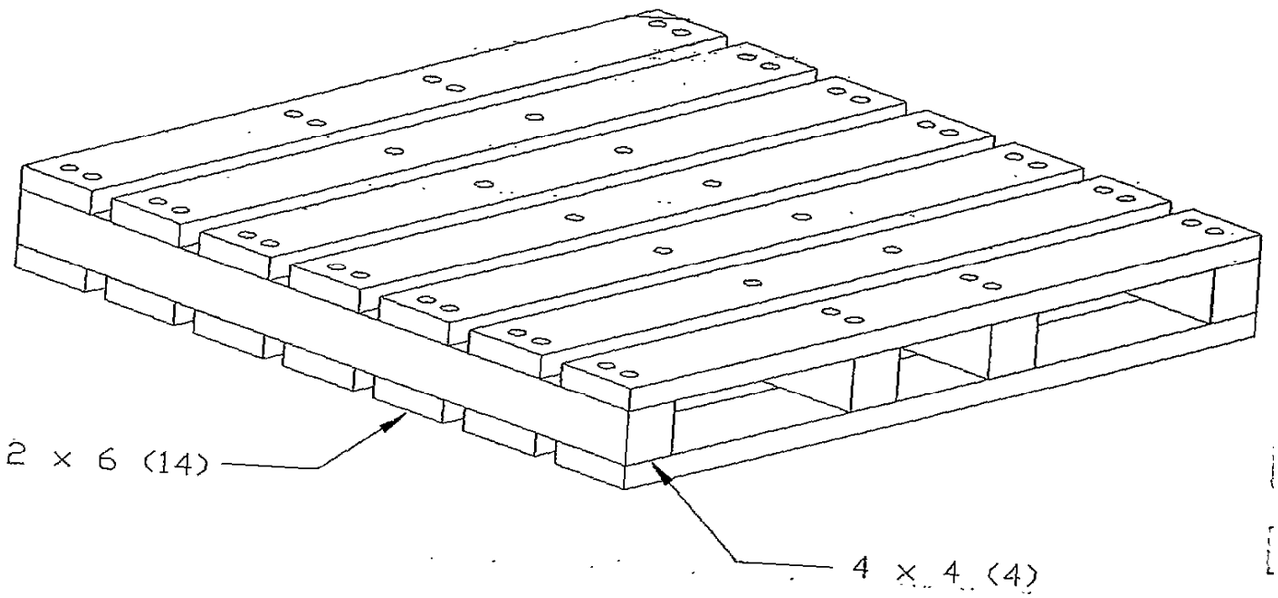

(a) Isometric view
Figure 5. Engineering drawing for the RPL pallet design

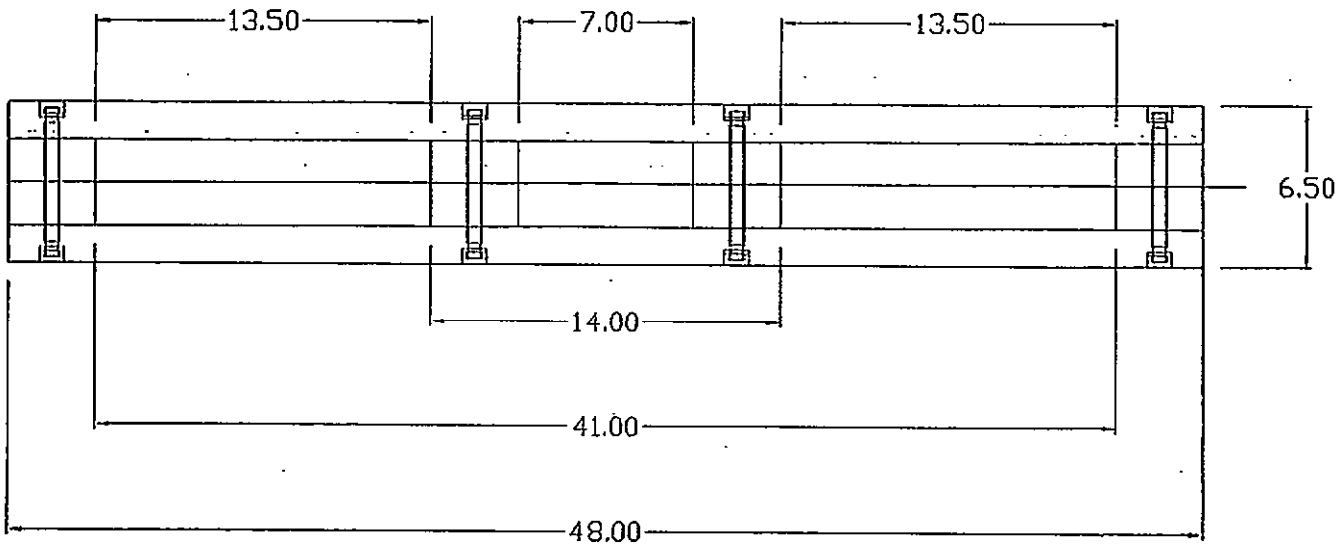

(b) End view

Figure 5. (Continued)

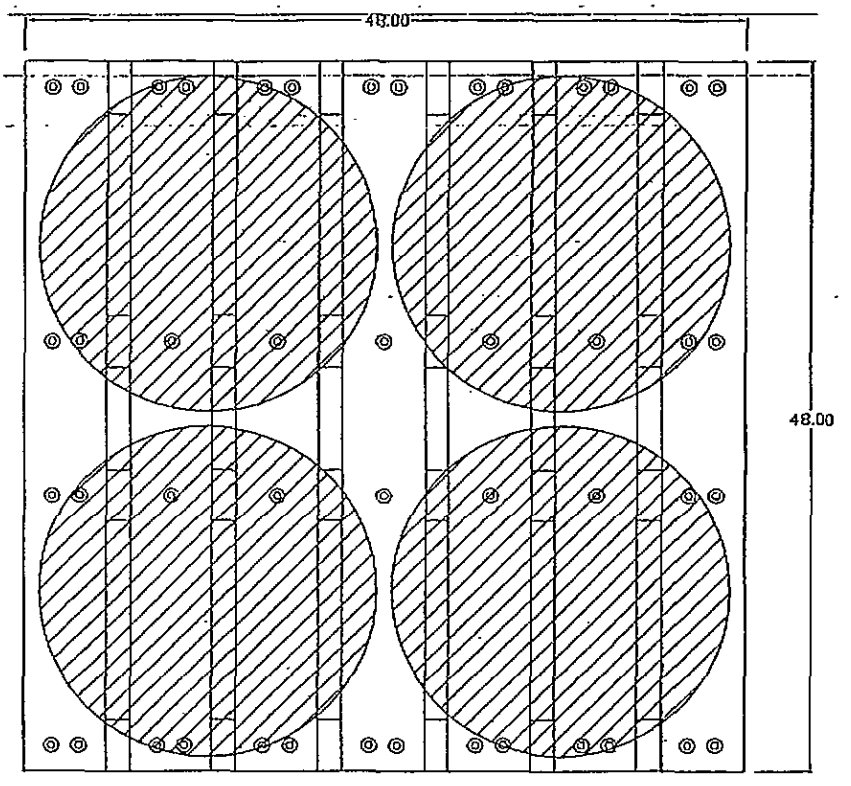

(c) Top view with four 55-gallon drum configuration

Figure 5. (Continued)

Figure 6. Photograph of assembled RPL pallet

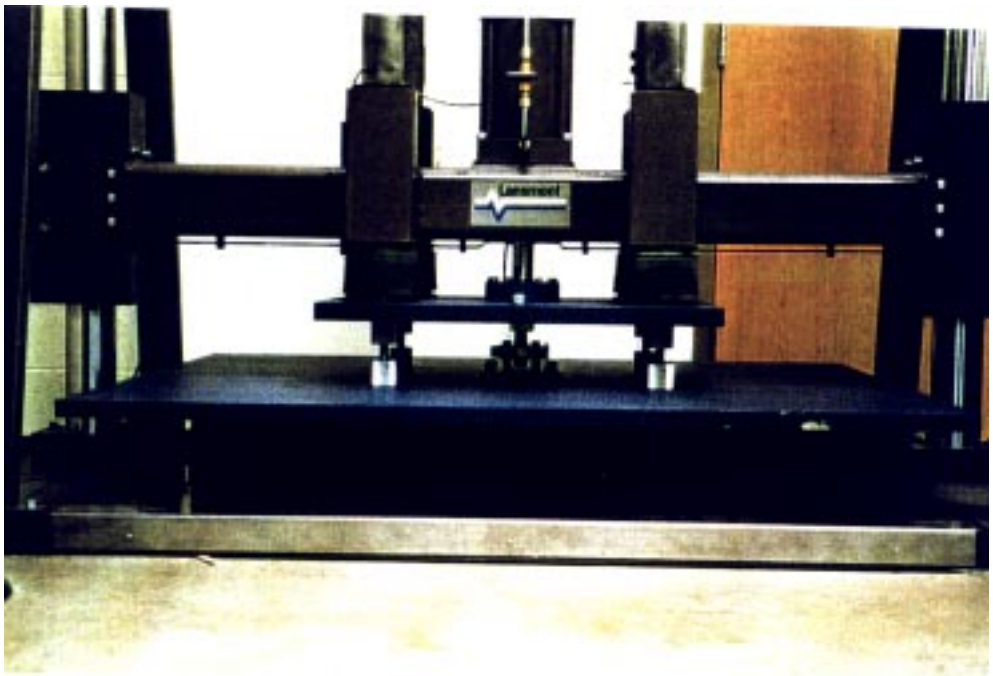

(a) Experimental setup

Figure 7. Full-scale compression test of RPL pallet

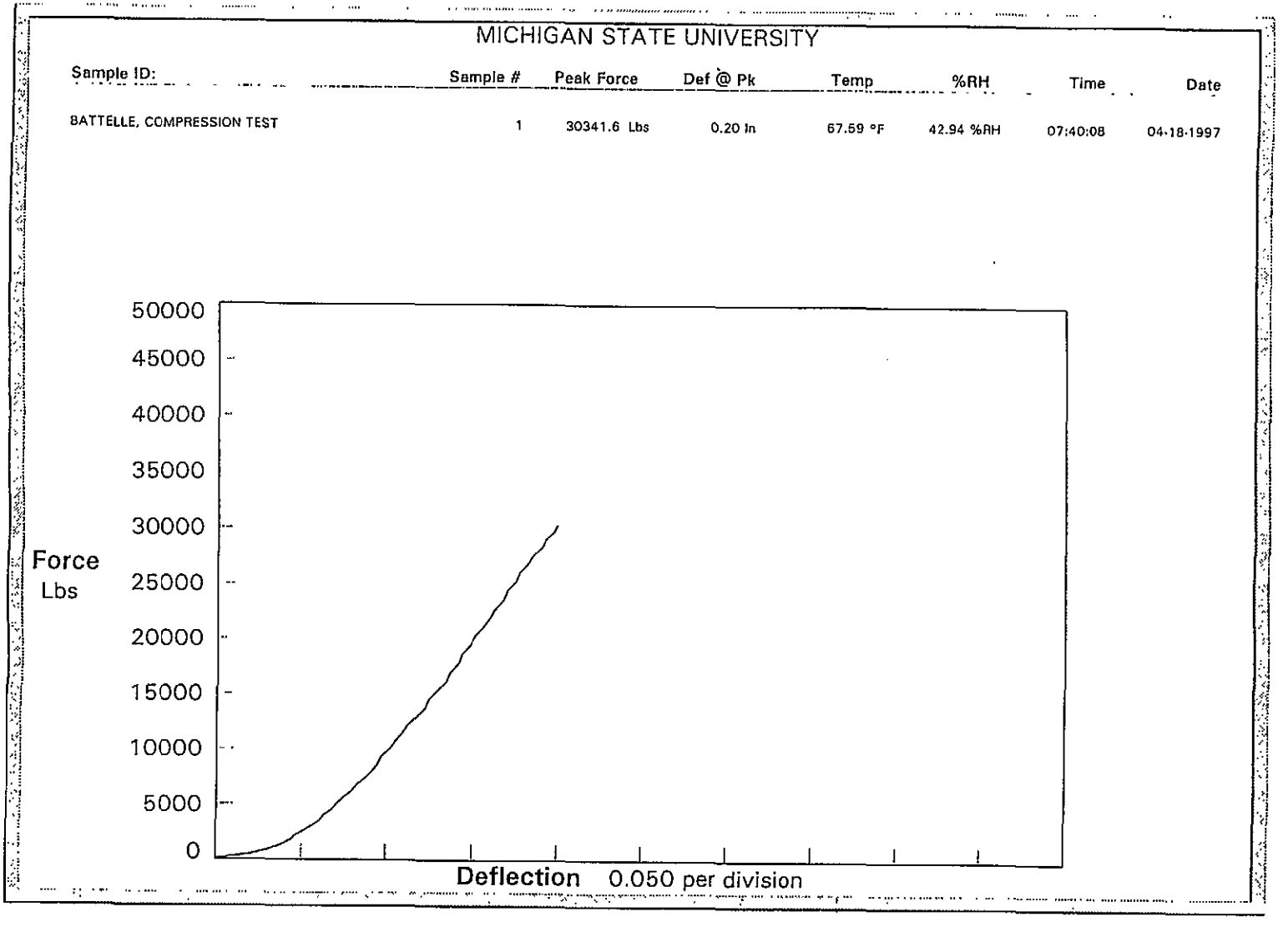

(b) Force deflection curve from compression test

Figure 7. (Continued)

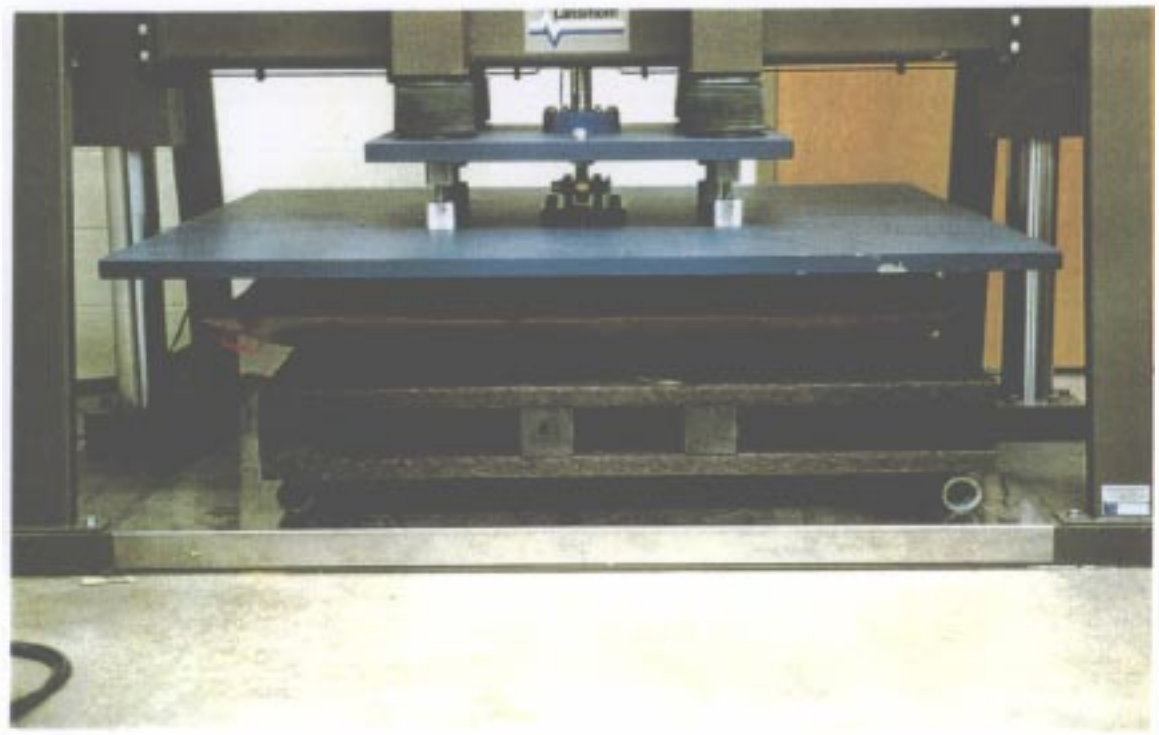

(a) Airbag flexural test

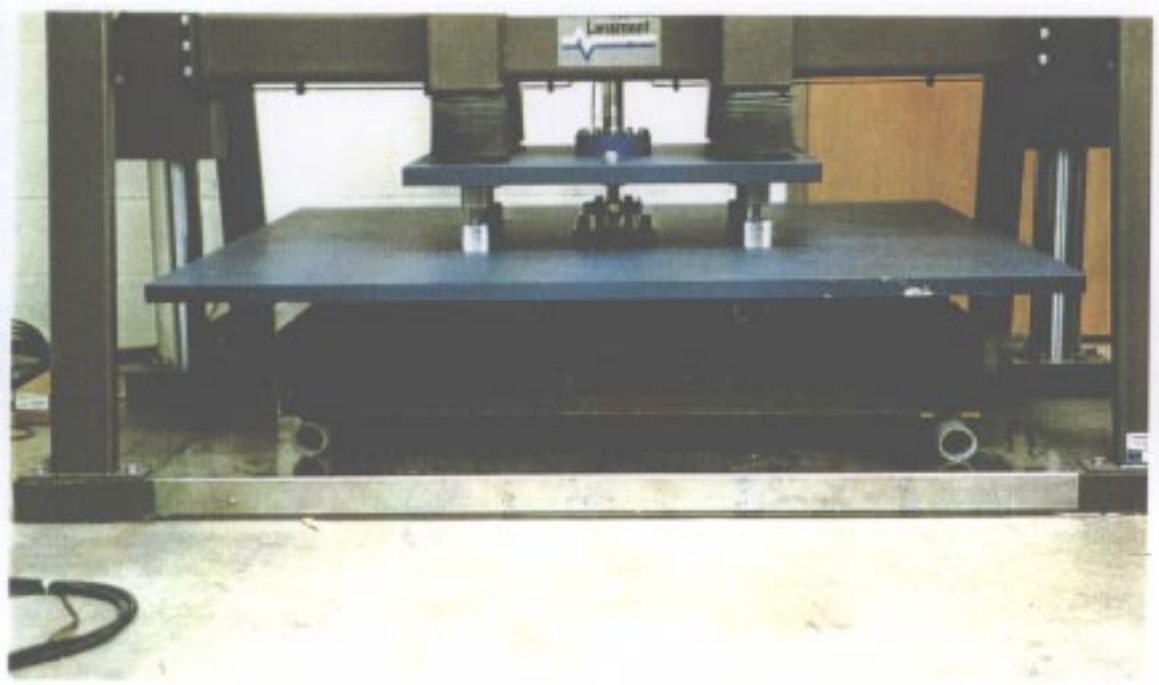

(b) Four-point bend flexural test

Figure 8. Full-scale flexural test of RPL pallet

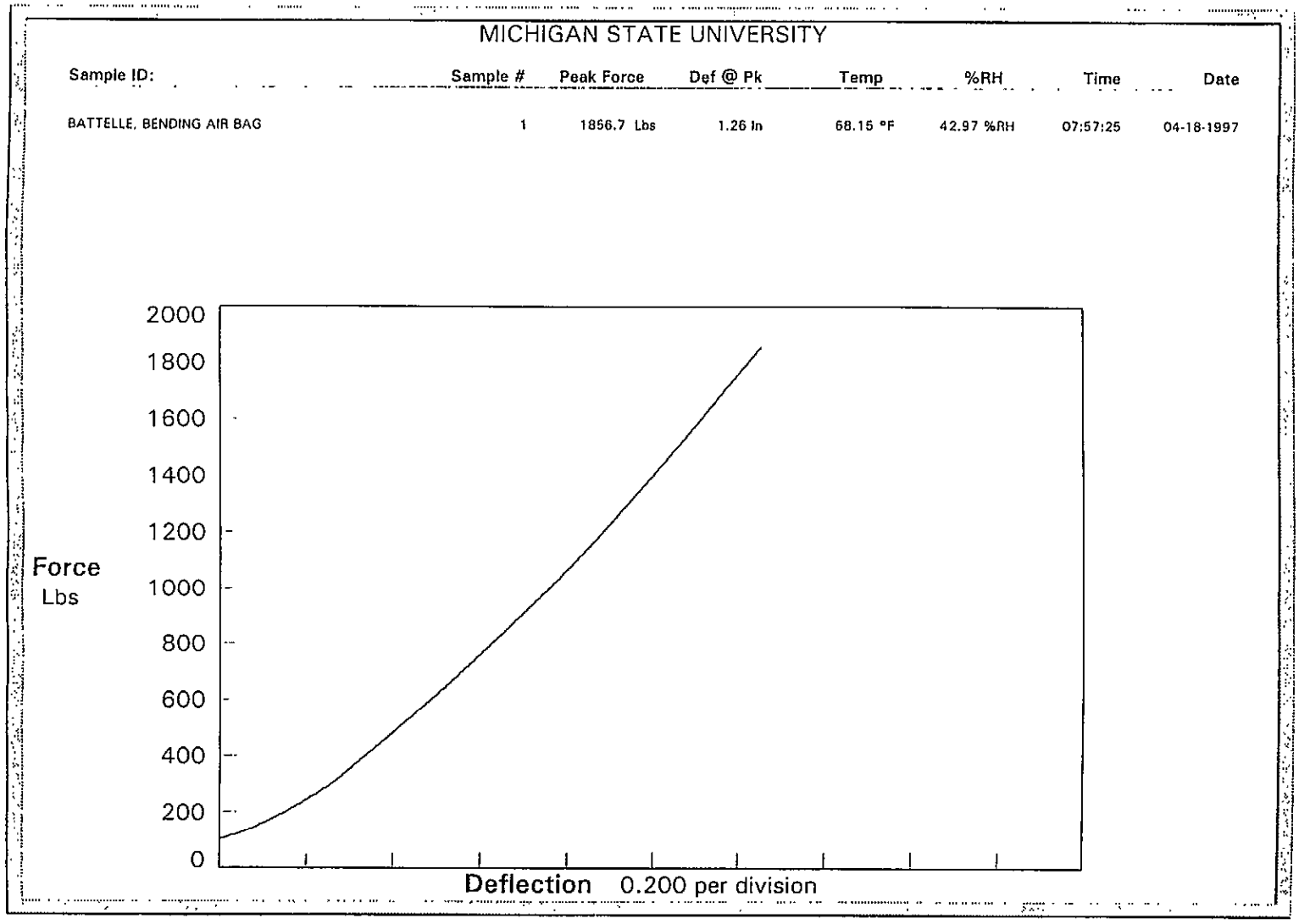

(a) Results for airbag test shown in Figure S(a)

Figure 9. Force-deflection results from full-scale flexural tests

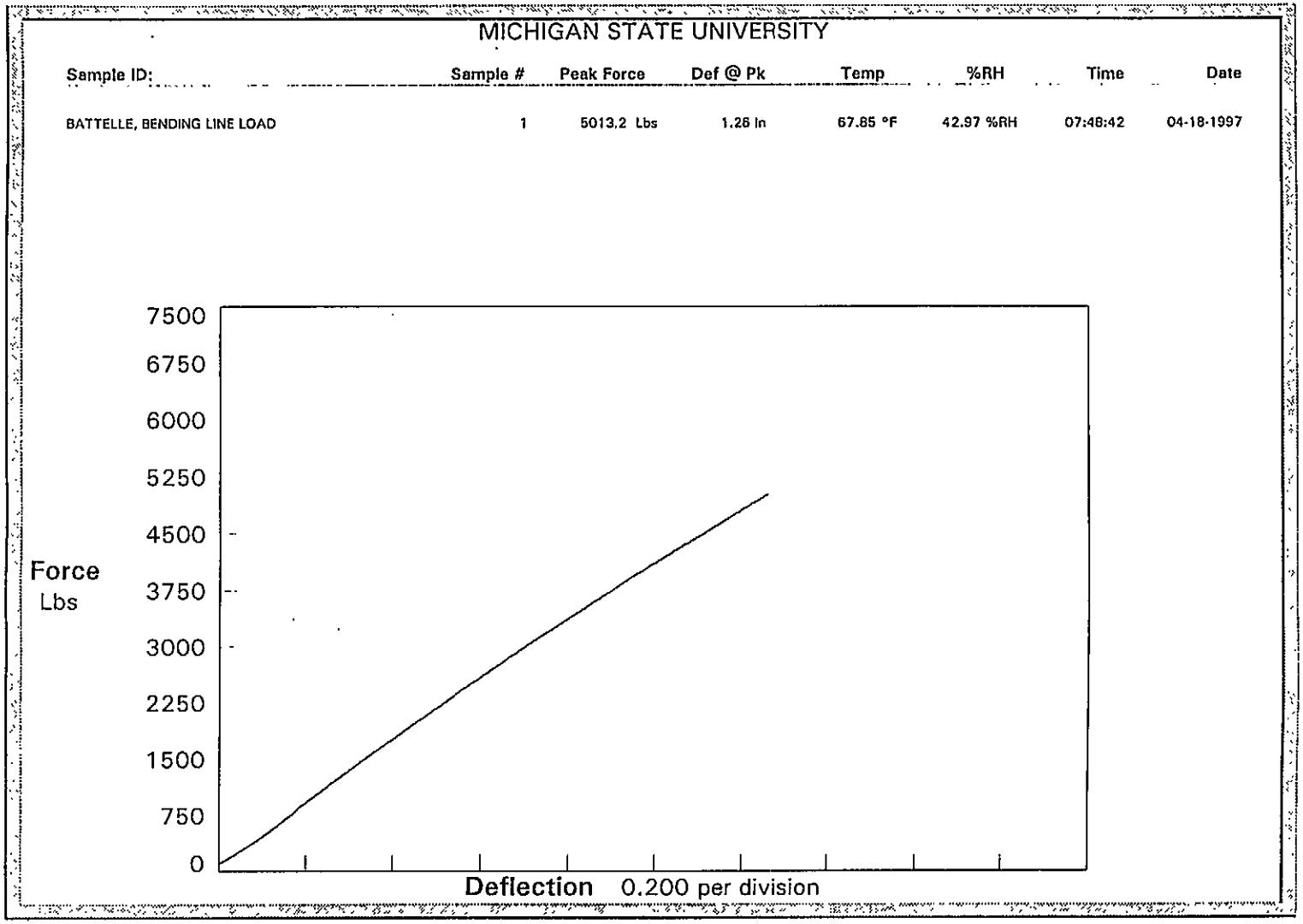

(b) Results for four-point bend test shown in Figure 8(b)

Figure 9. (Continued)

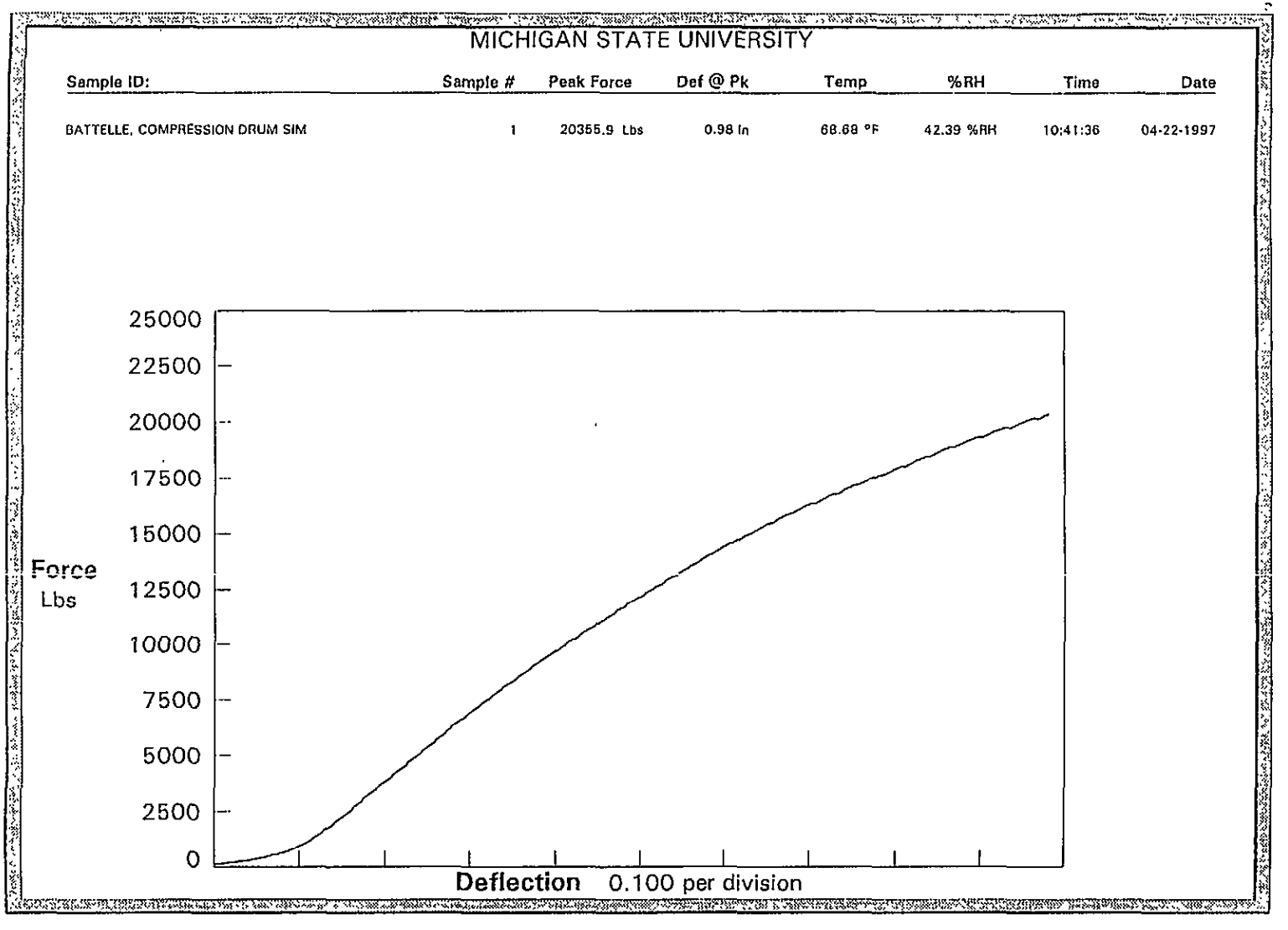

Figure 10. Force-deflection curve for full-scale compression test on RPL pallet with a simulation of four 55-gallong drum load

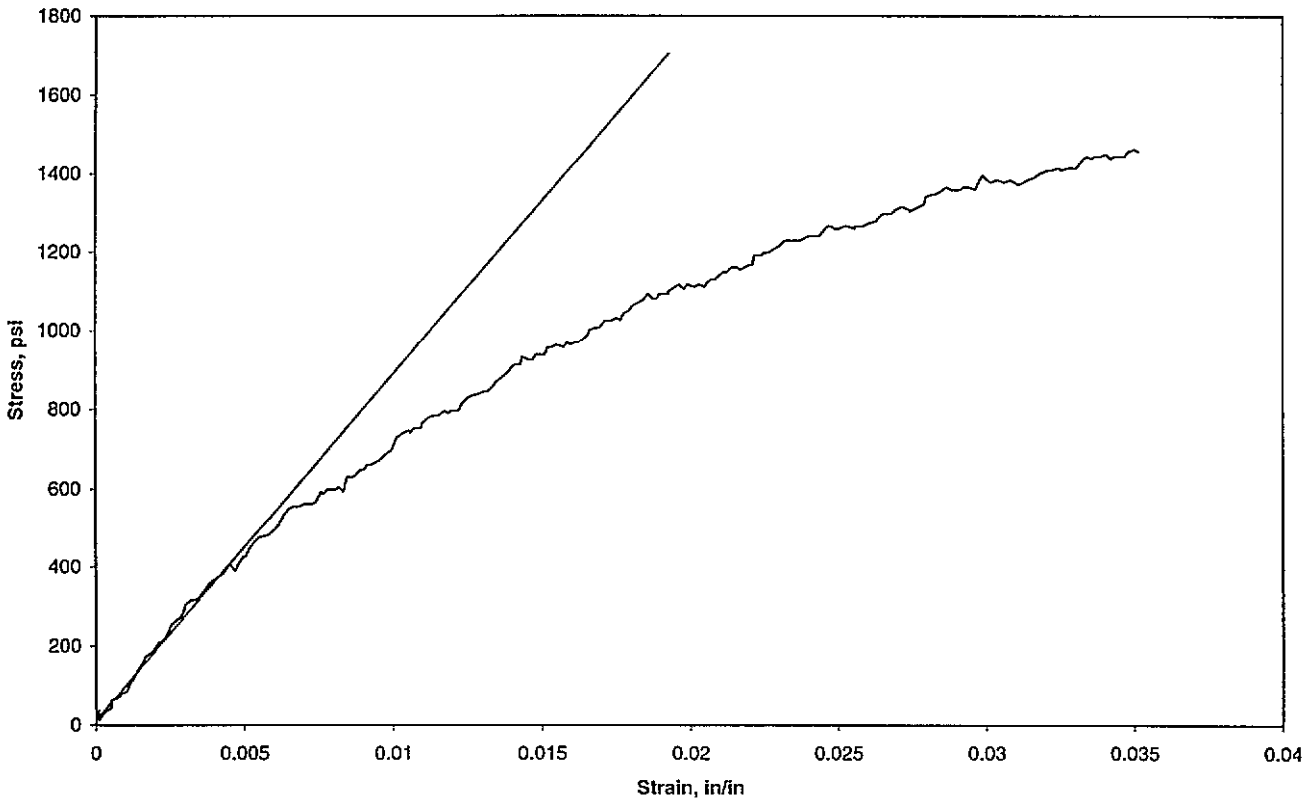

(a) Flexural data

Figure 11. Stress-strain curves for RPL used to fabricate pallet

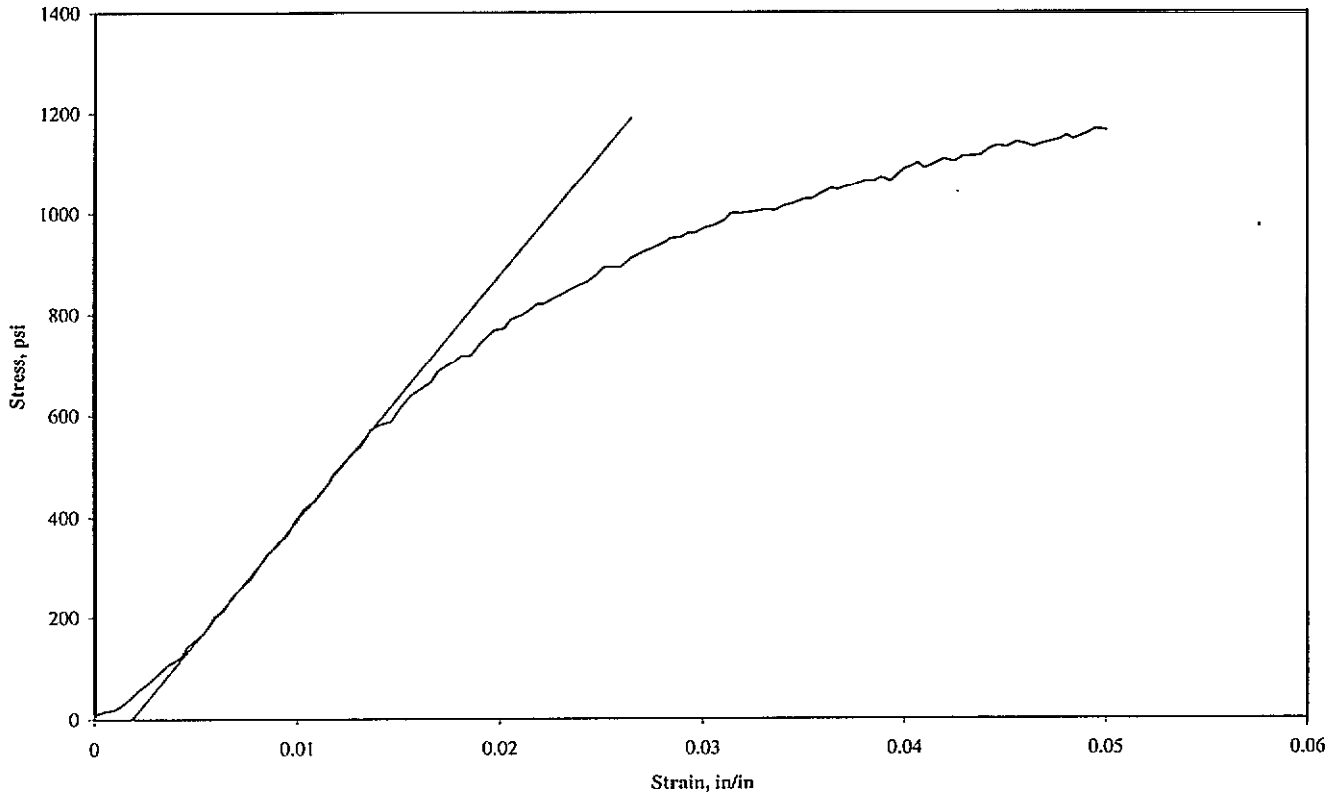

(b) Compression data

Figure 11. (Continued)

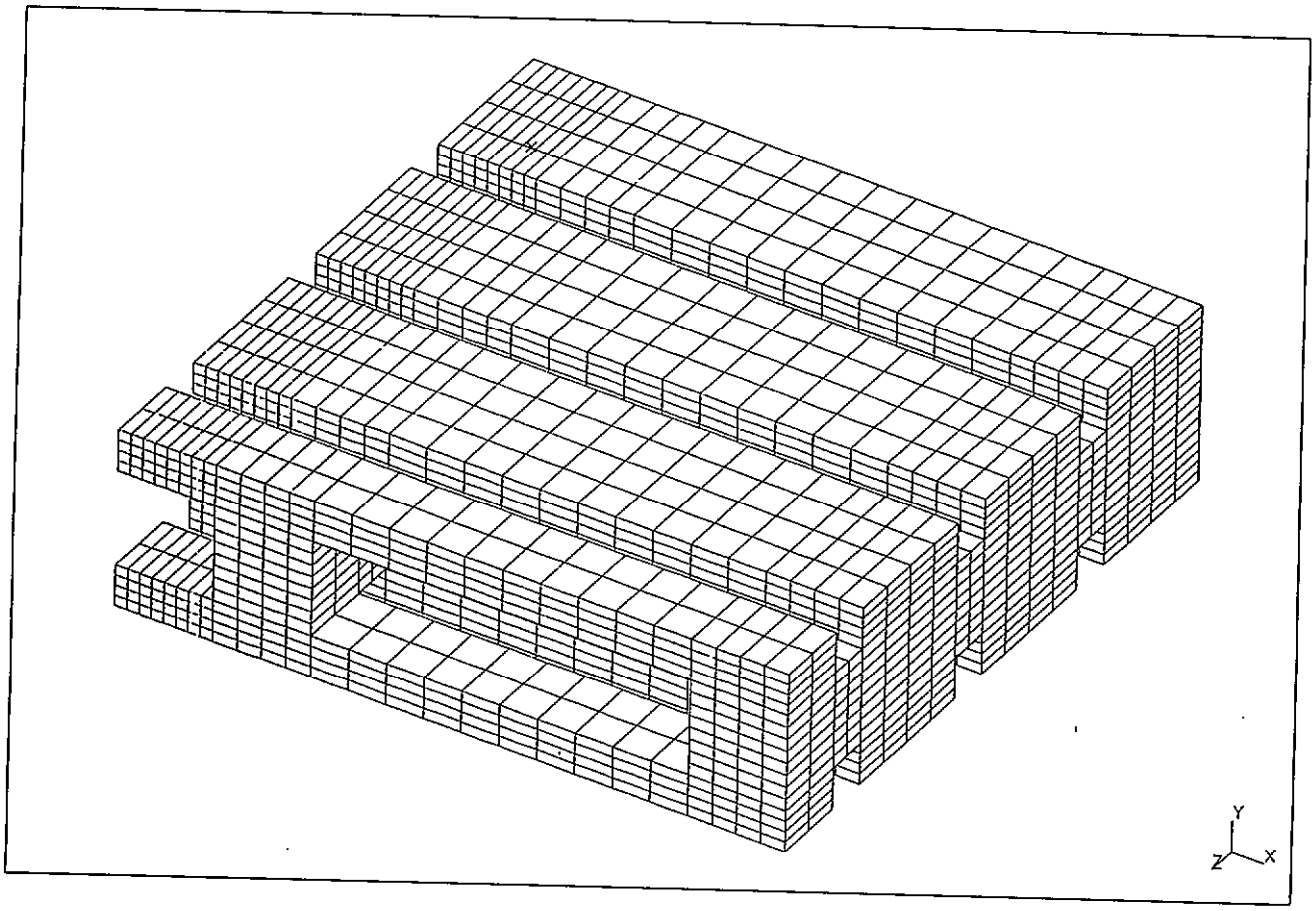

(a) Finite element model (3D) of one-quarter of the pallet

Figure 12. Analytical simulation of experimental data on RPL pallets

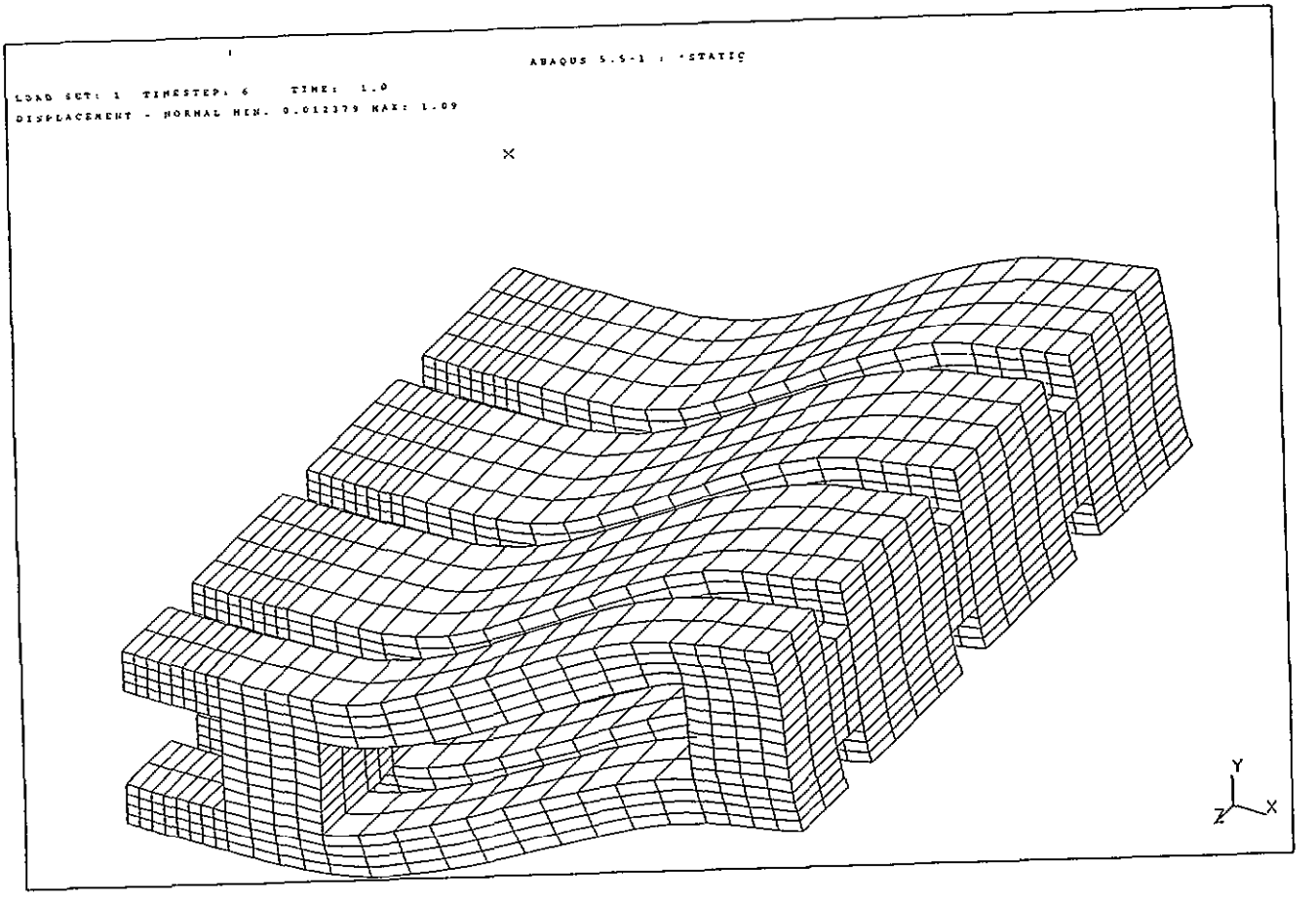

(b) FE simulation showing deformed pallet shape

Figure 12. (Continued)

(a) Three-level racked configuration at Location 1 -Former Production Area

Figure 13. Photographs of RPL pallets used at DOE-Fernald

(b) RPL pallet used in Location 1 after use

Figure 13. (Continued)

(a) RPL pallet being transported with a forklift

Figure 14. Photograph of RPL pallets used to ship material in Location 3 - Northstar Area

(b) RPL pallet after use

Figure 14. (Continued)

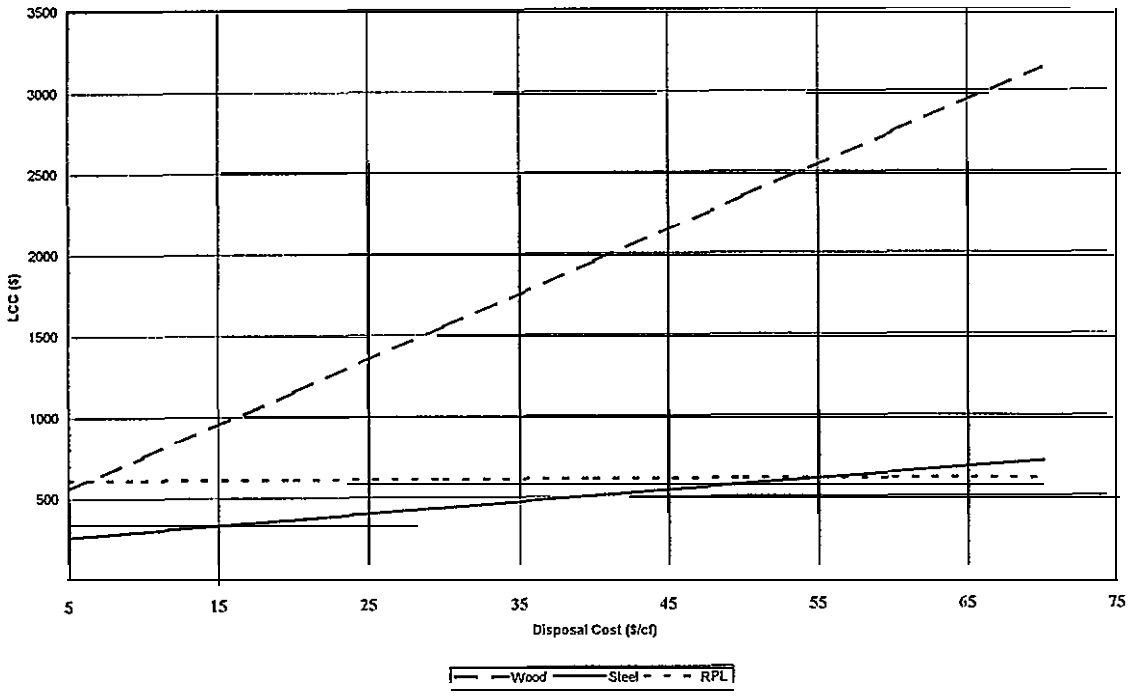

Figure 15. **Life cycle cost for wooden, galvanized steel, and RPL pallets as a function of disposal cost**

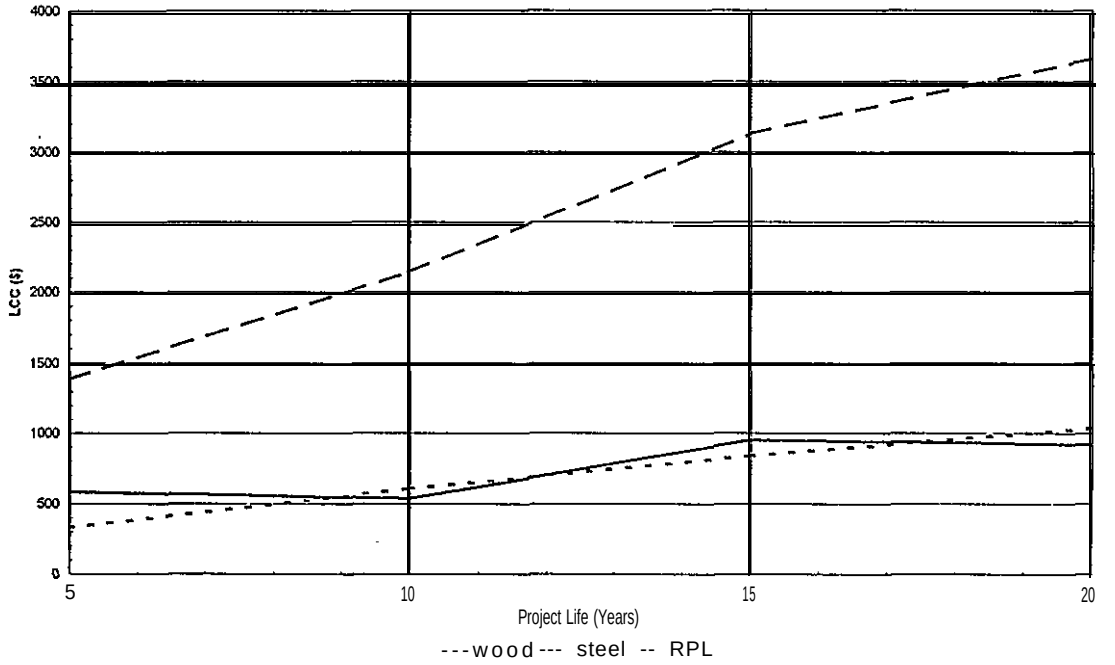

Figure 16. **Life cycle cost for wooden, galvanized steel, and RPL pallets as a function of the length of time pallets are needed**

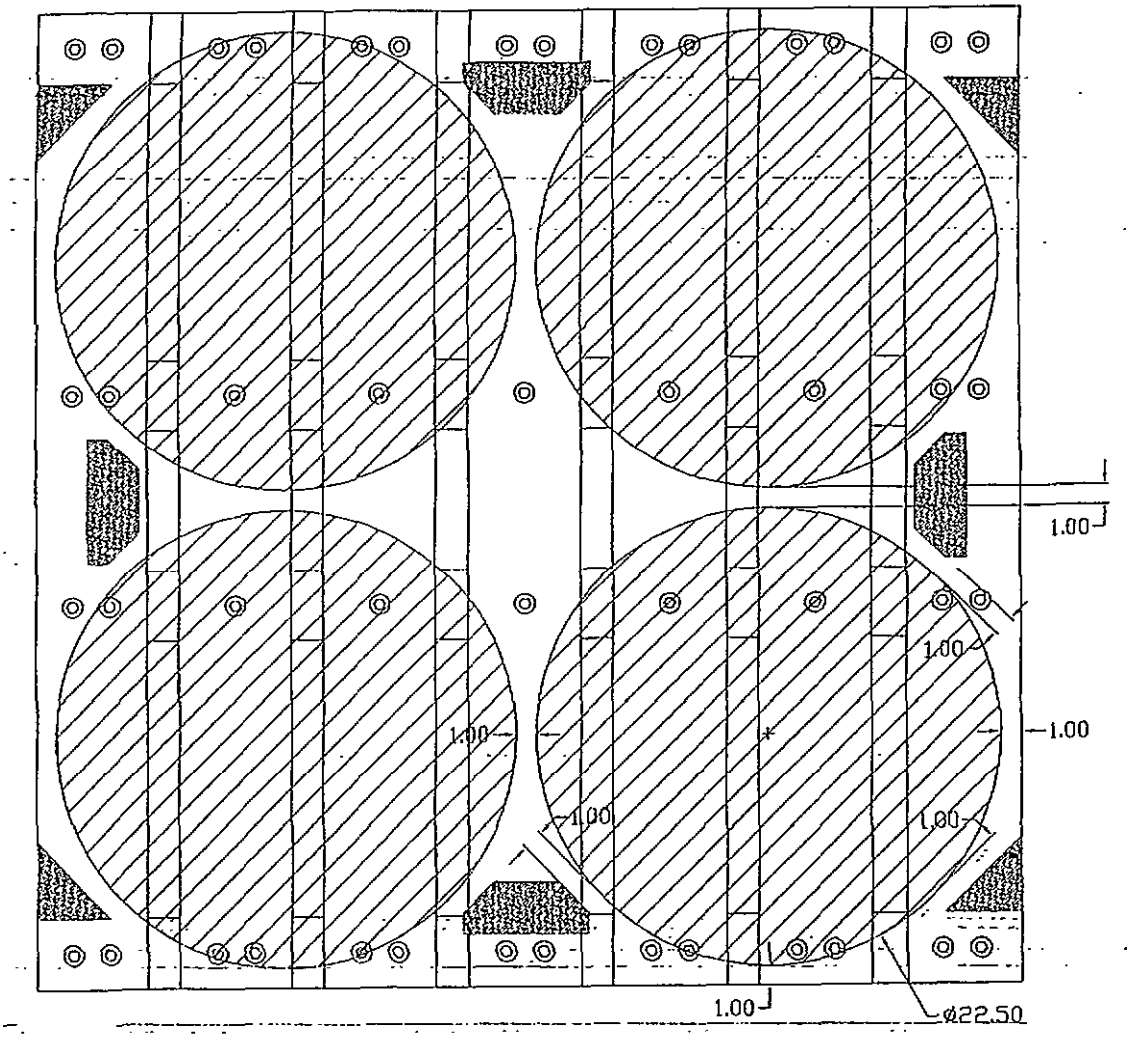

Figure 17. **Modified pallet design showing loading surface with 'stops' to prevent slipping of drums**

Table 1. Life cycle cost analysis for wooden pallets (10-year project life; disposal cost of $45/cf)

	1997	1998	1999	2000	2001	2002	2003	2004	2005	2006	
Year	1	2	3	4	5	6	7	8	9	10	11
PURCHASE	20		20		20		20		20		
MAINT. AND REPAIR											
DISPOSAL			503		503		503		503		503
ANNUAL COST	20	0	523	0	523	0	523	0	523	0	503
PW	20	0	488	0	456	0	426	0	397	0	357
NPV LCC	2144										

Table 2. Life cycle cost analysis for galvanized steel pallet (10-year project life; disposal cost of $45/cf)

	1997	1998	1999	2000	2001	2002	2003	2004	2005	2006	2007
Year	1	2	3	4	5	6	7	8	9	10	11
PURCHASE	160										
MAINT. AND REPAIR					25						
DISPOSAL											503
ANNUAL COST	160	0	0	0	25	0	0	0	0	0	503
PW	160	0	0	0	22	0	0	0	0	0	357
NPV LCC	538										

Table 3. Life cycle cost analysis for RPL pallets (lo-year project life)

Year	1997	1998	1999	2000	2001	2002	2003	2004	2005	2006	2007
Year No., Y	1	2	3	4	5	6	7	8	9	10	11
PURCHASE	275					275					
MAINT. AND REPAIR			14					14			
DISPOSAL											
RECYCLE						50					50
ANNUAL COST	275	0	14	0	0	325	0	14	0	0	50
PW	275	0	13	0	0	274	0	11	0	0	35
NPV LCC	608										

Table 4. Decision matrix for pallet selection based on DOE-methodology [Ref. 13,14] (lo-year project life; disposal cost of $45/cf)

Decision Parameter	Wooden	Gal. Steel	RPL
Life Cycle Cost at NPV, $	2144	538	608
Insitutional Preference	2	4	5
Local Public Acceptance	1	3	5
Environmental Impact	1	2	5
Worker Safety	4	5	5

Appendix A

List of Standards for Wooden Pallets

List of Standards for Wooden Pallets

1. Stiffness and Flexural Strength
   (ASTM D-l 185, Section 8)

2. Vibration Testing of Pallet Loads
   (ASTM D-999)

3. Lateral Stability
   (ASTM D-l 185, Section 24)

4. Rigidity of the Product
   (ASTM D-l 185, Section 30)

5. Inclined Impact Test of Leading Edge
   (ASTM D-l 185, Section 36)

6. Fort Tip Impact Resistance of Blocks and Posts
   (ASTM D-l 185, Section 43)

7. Pallet Terminology (ASME MM 1.1.2 - 1189)

8. Pallet Sizes (ASME MM 1.2.2 M - 1989)

9. Procedures for Testing Pallets (ASME MH 1.4.1 M - 1989)

10. Fasteners for Pallets (ASME MH 1.7 M - 1988)

11. Disability of Pallets (ASME MH 1.6 - 1987)

Appendix B

DOE-Fernald Specifications for Wooden Pallets

Fernald Environmental
FERMCO
Restoration Management Corporation

INTEROFFICE MEMORANDUM

TO:	Stephen Moore, RSO	Date:	February 15, 1994
Location:	Fernald, MS 66	Reference:	M:ENG:(FDE):94-0036
From:	Stephen Murray, ENG Stephen Murray /bec	FERMCO #:	M:ENG:(FDE):94-0041
Location:	Springdale, MS 81-3	Client:	DOE DE-AC05-920R21972
Extension:	648-6126	Subject:	Static and Dynamic Load Limits for Wood Pallets

C: File Record Storage Copy 106.4.12.2
J. A. Eckstein
R. C. Worsley

The above-referenced letter explains the method used to calculate the allowable dynamic load on Red Oak pallets constructed per the attached drawing and specification sheet.

The conclusion is the pallets will withstand an allowable static load of 27,100 pounds and maximum dynamic load of 6,775 pounds. Since our procedures limit loading 55 gallon drums to 1200 pounds, the maximum load from these drums stacked four (4) high and four (4) drum per skid is 19,200 pounds, well within the 27,100 allowable static load.

Additional,questions or comments on this subject may be directed to R. C. Worsley at 648-6155. MS 81-3.

SJM:bec
Attachments

1. KNOTS & WANE

THE AVERAGE DIAMETER 0F KNOTS SHALL NOT BE GREATER THAN ONE-THIRD THE NOMINAL WIDTH OF THE BOARD.

WANE IN DECKBOARDS SHALL NOT EXCEED 1/6 WIDTH OR 1/2 THICKNESS - UNLIMITED IN LENGTH.

WANE IN STRINGERS SHALL NOT EXCEED 1/4 WIDTH OF NAILING FACES OR 1/3 WIDTH OF OTHER FACES - UNLIMITED IN LENGTH. NO MORE THAN 1/3 OF THE PIECES OF AN INDIVIDUAL PALLET MAY CONTAIN WANE.

2. SPACING

ALL DECKBOARDS SHALL BE NAILED TO THE STRINGERS WITH A MAXIMUM SPACING OF 2 3/4" ±1/4"

3. NAILING

NAILS SHALL BE 2 1/4" LG. x 11 GAGE MINIMUM, SPIRAL 60° HELIX ANGLE THREAD, FOUR FLUTES, DIAMOND POINT, FLAT HEAD, 3 NAILS PER INTERSECTION, NAILS SHALL BE COMPLETELY SEATED AND DRIVEN PERPENDICULAR TO DECKBOARDS. ALL BENT NAILS SHALL BE REMOVED.

4. MINIMUM DIMENSION FOR LUMBER

1 x 6 IS 3/4"x 5 1/2"
4 x 4 IS 3 3/4" x 3 3/4"

5. MATERIAL OF CONSTRUCTION

FIRE RETARDANT TREATED (MINIMUM CLASS B) RED OAK

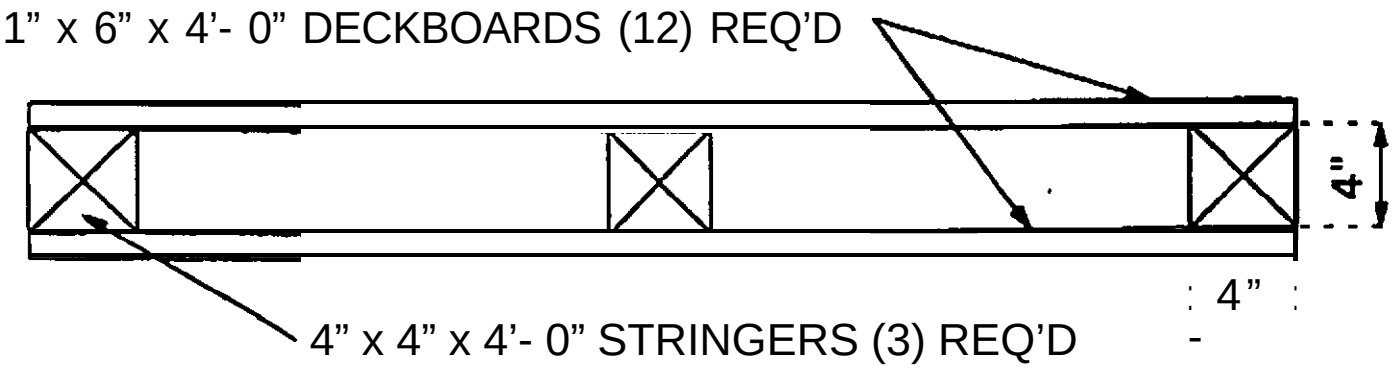

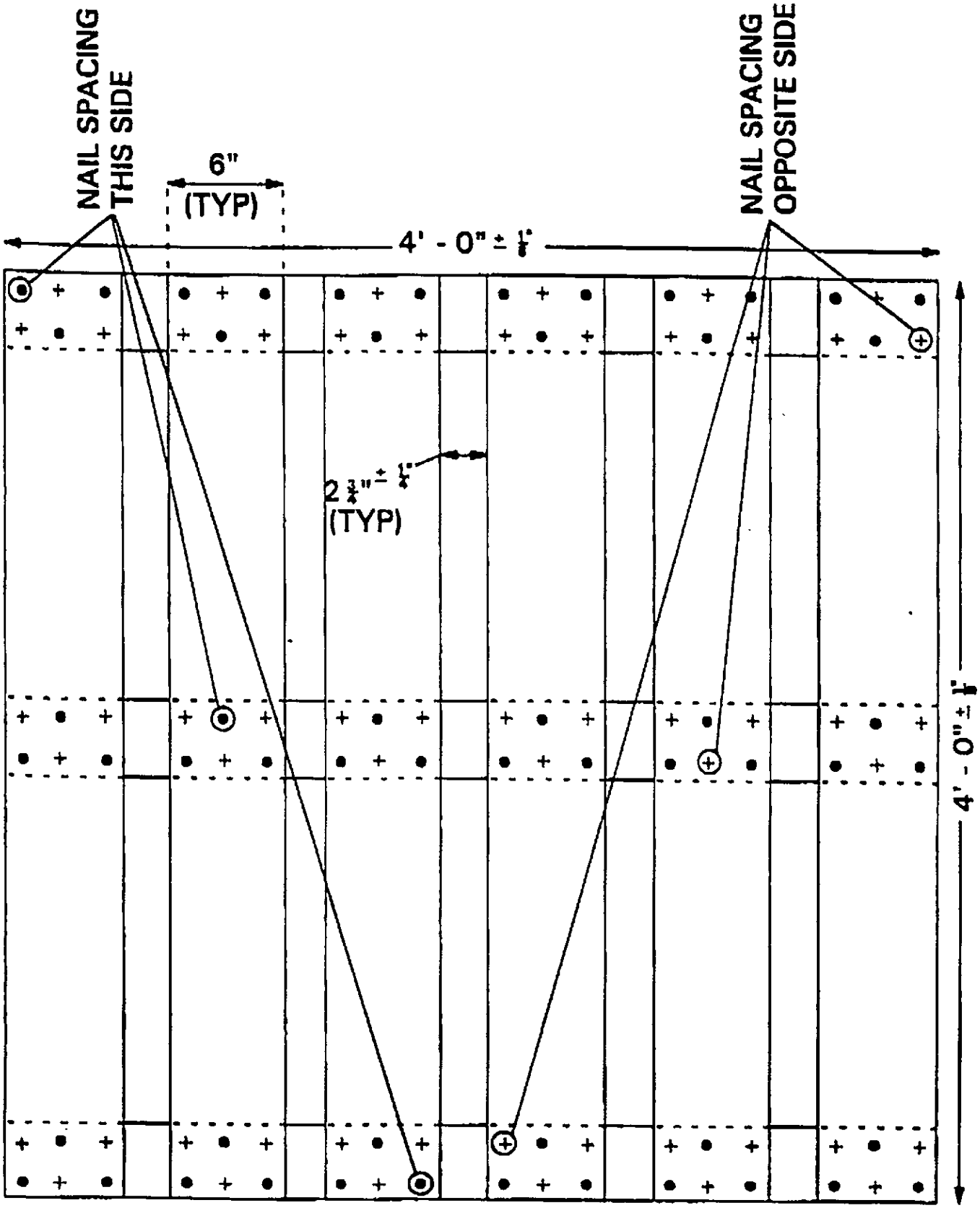
NAIL SPACING THIS SIDE
6" (TYP)
4' - 0" ± 1/8"
NAIL SPACING OPPOSITE SIDE
2 3/4" ± 1/4" (TYP)
4' - 0" ± 1/8"

SPECIFICATION

FOR

WOODEN SHIPPING PALLETS

The pallets shall be 48 inches by 48 inches (±1/4 inch): reversible with two way entry and a 2400 pound minimum load capacity.

Stringers (3) shall be 3 3/4 inches x 3 3/4 inches x 48 inches rough sawn hardwood with the 4 inch dimension horizontal. The stringers shall be located at the center and flush with the outer edges. Sound knots not exceeding one third of the face width are permissible.

Top and bottom deck boards (12) shall be made of nominal 3/4 inch by 6 inch by 48 inch rough sawn hardwood, nailed to the stringers with a maximum spacing of 1 7/8 inches between boards. Sound knots less one half of-the board width are permissible. The maximum length of end splits shall not exceed three inches in length.

Nails shall be 2 l/4 long x 11 gage.minimum, spiral 60 helix angle thread, four flutes, diamond point, flat head, four nails per intersection. Nails shall be completely seated and driven perpendicular to deckboards. Automatic nailers may be utilized with equivalent fasteners to be driven in a staggered pattern. All fasteners shall be driven perpendicular to the deckboards and completely seated. All bent nails shall be removed.

The lumber used may be Oak, Hickory, Beech, Ash, or Yellow Pine. The minimum lumber dimensions shall be 2 3/4" x 3 3/4"x 48" for the stringers and 3/4" x 5 l/2" for the deck boards.

Appendix C

Copy of the U.S. EPA Comprehensive Procurement Guideline for Pallets Containing Recovered Materials from November 1996

Part H—Miscellaneous Products

Part H-1—Pallets Containing Recovered Wood, Plastic, or Paperboard

Preference Program: EPA recommends that, based on the recovered materials content levels shown in Table H–1, procuring agencies establish minimum content standards for use in purchasing pallets. EPA requests additional information on the performance of virgin versus recovered content plastic pallets for non-military Federal agency use and military applications.

TABLE H–1.—RECOMMENDED RECOVERED MATERIALS CONTENT LEVELS FOR PALLETS CONTAINING RECOVERED WOOD, PLASTIC, OR PAPERBOARD

Product	Material	Post-consumer content (%)
Wooden pallets	Wood	95–100
Plastic pallets	Plastic	100
Paperboard pallets.	Paperboard	50

Note: EPA's recommendation does not preclude a procuring agency from purchasing pallets manufactured from another material. It simply requires that a procuring agency, when purchasing pallets made from wood, plastic, or paperboard, purchase these items made with recovered materials when these items meet applicable specifications and performance requirements.

Specifications: EPA recommends that procuring agencies use the following specifications when procuring pallets:

(1) The Grocery Manufacturers of America issued a widely used standard for 48 by 40-inch stringer pallets known as the "GMA spec." A copy of this specification is available from the RCRA Hotline at 1–800–424–9346.

(2) The National Wooden Pallet and Container Association is developing a standard through the American National Standards Institute (ANSI) for repairable 48 by 40-inch lumber-deck pallets. The ANSI standard is scheduled for release in Fall 1996.

[FR Doc. 96–28735 Filed 11–6–96; 8:45 am]
BILLING CODE 6560–50–P

Appendix D

DOE-Fernald Specifications for Bolt Used in RPL Pallets

THE PLASTIC LUMBER COMPANY, INC.,

April 4, 1997

MAKING RECYCLING A REALITY

Michael A. Krstich, Ph.D.
Environmental Management Solutions
3520 Stettinuis Ave, Suite 1
Cincinnati, Ohio 45208

Re: Fernald Bolt Spec

Dear Mike,

Per our recent conversations, I have enclosed the bolt assemblies and sleeves that will be used in the Fernald Pallet. As we discussed, you will hand deliver this information and product samples to Fernald Quality Control for their approval. Please notify Prabhat and myself as soon as possible with their response as we are beginning assembly later this week for the Michigan State testing.

3/8" x 5 ½" Hex Head Bolt, Locking Nut and SAE Washer Assemble:

Enclosed is a 'sample of' the bolt assembly and an IFI (Industrial Fastener Institute) specification sheet as provided by our supplier, Fastener Maintenance, Inc., Akron, Ohio.

Manufactured by Nucor Fasteners, St. Joe, Indiana, Lot N 76921A.

½" TP-304/TP Stainless Steel Tubing Sleeve:

A certificate from the Manufacturer, Gibson Tube, Inc. North Branch, NJ and as supplied by our vendor, J. F. Good Supply, Akron, Ohio.

Thank you for your attention to this matter. Please call should you need additional information.

With Best Regards,

The Plastic Lumber Co., Inc.

Alan E. Robbins
President

cc: Prabhat Krishnaswamy

540 S. MAIN ST., BLDG. 7
AKRON, OHIO 44311-1023

330 762-8989
800 886-8990

FAX 330 762-1613
http://www.plasticlumber.com

IFI

ASTM, SAE AND ISO GRADE MARKINGS AND MECHANICAL PROPERTIES FOR STEEL FASTENERS

TECHNIC DATA

Identification Grade Mark	Specification	Fastener Description	Material	Nominal Size Range (in.)	Mechanical Properties		
					Proof Load (psi)	Yield Strength Min (psi)	Tensile Strength Min (psi)
	SAE J429 Grade 5	Bolts, Screws, Studs	Medium Carbon Steel, Quenched and Tempered	1/4 thru 1 Over 1 to 1-1/2	85,000 74,000	92,000 81,000	120,000 105,000
	ASTM A449			1/4 thru 1 Over 1 thru 1-1/2 Over 1-1/2 thru 3	85,000 74,000 55,000	92,000 81,000 58,000	120,000 105,000 90,000
	SAE J429 Grade 5.1	Sems	Low or Medium Carbon Steel, Quenched and Tempered	No. 6 thru 3/8	85,000	–	120,000
	SAE J429 Grade 5.2	Bolts, Screws, Studs	Low Carbon Martensitic Steel, Quenched and Tempered	1/4 thru 1	85,000	92,000	120,000
A325	ASTM A325 Type 1	High Strength Structural Bolts	Medium Carbon Steel, Quenched and Tempered	1/2 thru 1 1-1/8 thru 1-1/2	85,000 74,000	92,000 81,000	120,000 105,000
A325	ASTM A325 Type 2		Low Carbon Martensitic Steel, Quenched and Tempered	1/2 thru 1	85,000	92,000	120,000
A325	ASTM A325 Type 3		Atmospheric Corrosion Resisting Steel, Quenched and Tempered	1/2 thru 1 1-1/8 thru 1-1/2	85,000 74,000	92,000 81,000	120,000 105,000
BB	ASTM A354 Grade BB	Bolts, Studs	Alloy Steel, Quenched and Tempered	1/4 thru 2-1/2 2-3/4 thru 4	80,000 75,000	83,000 78,000	105,000 100,000
BC	ASTM A354 Grade BC				105,000 95,000	109,000 99,000	125,000 115,000
	SAE J429 Grade 7	Bolts, Screws	Medium Carbon Alloy Steel, Quenched and Tempered[4]	1/4 thru 1-1/2	105,000	115,000	133,000
	SAE J429 Grade 8	Bolts, Screws, Studs	Medium Carbon Alloy Steel, Quenched and Tempered	1/4 thru 1-1/2	120,000	130,000	150,000
	ASTM A354 Grade BD		Alloy Steel, Quenched and Tempered				

MFG BY NUCOR FASTENERS LOT N769 ST. JOES

See footnotes on Page N—24.

CERTIFICATE OF TEST

GIBSON TUBE, INC. 100 ASPEN HILL ROAD NORTH BRANCH, NJ 08876 (908)-218-1400 COPY #- 3

Sold To: MARMON/KEYSTONE**PA**
P.O. BOX 791
BUTLER PA 16001

S.O.#: 51314-00
Customer PO#: 80-6074
Date: June 19, 96

Specification: 1/2 X 035 TP304/304L ASTM-A269-94A/A249-94A/ASME-SA249/SA249M-92A

MECHANICAL TESTS:

Heat #	Flat	Reverse Flattening	Flange	Reverse Bend	Rockwell Hardness	Eddy Current	Hydrostatic P.S.I.	Tensile Str. P.S.I.	Yield Str. P.S.I.	%Elong In 2"
919750	OK	OK	OK		B76	OK		93617	51063	58

HEAT ANALYSIS

Heat #	C	MN	P	S	SI	CR	NI	MO	TI	CU	AL	FE	N	CO	V	W	TA
919750	0.023	1.800	0.031	0.006	0.400	18.260	8.300	0.000	0.000	0.000	0.000	BAL	0.000	0.000	0.000	0.000	0.000

ADDITIONAL INFORMATION

ANNEALING-BRIGHT ANNEALED

Air Test Under Water P.S.I.

High Pressure Nitrogen P.S.I.

MARMON/KEYSTONE CORPORATION

This report, to which this stamp is affixed, is a copy of the original supplier's mill report. Then it indicates not only the complete identification of this material but also a record of tests made in accordance with specification requirements. If several items are shown in this report, those items which are shipped to you are checked (✓) as being pertinent. We certify herewith that the material supplied to you is completely identifiable by this document.

Cust. P.O. SOKS-28056
Part No.
MKC Order No. 64503
Date 7-18
Q.C. Signature

WARNING
MATERIAL SAFETY DATA SHEETS FOR THIS PRODUCT HAVE BEEN SUPPLIED TO YOUR PURCHASING DEPARTMENT. FOR AN ADDITIONAL COPY PHONE 908-218-1400. CAUTION: PROCESSING THAT MAKES FUMES, DUST, OR SOLUTIONS MAY CAUSE LUNG DISEASE. SEE MATERIAL SAFETY DATA SHEETS FOR FURTHER INFORMATION.

Anthony Guarino

Q.C. REVIEWED 6/18/96 PJL

Q.C. FORM #114
0- 06/29/94

8-19212

Appendix E

Report on Full-Scale Tests on RPL Pallets from Michigan State University

MICHIGAN STATE
UNIVERSITY

TESTING AND EVALUATION OF PALLETS FOR COMPRESSION, IMPACT, AND VIBRATION

RECYCLED COMPOSITE

Testing Services Performed for

Prahbat Krishnaswamy
Battelle Corportaion
505 King Avenue
Columbus, OH 43201-2693

THE SCHOOL OF
PACKAGING
Michigan State University
130 Packaging Building
East Lansing, Michigan
48824-1223
Department Office
517/355-9580
FAX: 517/353-8999
http/www.pkg.msu.edu/
Director's Office
517/355-4555
FAX: 517/353-8999
Student Affairs
517/353-4439
FAX: 517/432-2036

Testing Services Performed By

Dr. Paul Singh, Associate Professor
School of Packaging
Michigan State University
East Lansing, Ml 48824-1223

April 22, 1997

TESTING AND EVALUATION OF PALLETS FOR COMPRESSION, IMPACT, AND VIBRATION

INTRODUCTION:

The purpose of these tests was to determine the resistance of the **"Recycled Composite"** type of pallet. The samples of these pallets were provided by Battelle Corporation and tested to the various configurations listed below:

1. Stiffness and Flexural Strength
2. Vibration Testing of Pallet Loads
3. Lateral Stability and Diagonal Rigidity of the Pallet due to Drops
4. Impact Test of Leading Edge, Blocks and Posts

The tests were performed using recommended test procedures and severity levels as indicated in the appropriate ASTM Standards and test methods developed by Michigan State University. These methods provide a uniform basis to compare and evaluate pallet structures made from different materials and designs to the expected hazards found in the distribution environment during shipping and handling of palletized loads.

All pallets were inspected prior to testing at the School of Packaging Test Labs. A total of four pallets were used for these tests. All pallets were pre-conditioned at 72°F and 50% Relative Humidity for at least 24 hours prior to test.

PALLET DESCRIPTION AND SIZE:

Size: 48 in. x 48 in.
Weight: 185 lbs
Forming Process: Plastic Lumber
Material: Recycled Composite
Shape: Two way fork truck access, stringer and deckboard design.

Complete details on forming process, shape and design of pallet structure, and dimensional tolerances are available from Prahbat Krishnaswamy, at Battelle Corporation.

TEST METHODS AND DATA:

Static Tests:

1. Stiffness and Flexural Strength:

These tests were performed in accordance with recommended procedures. The pallets were loaded as described in Figure 1. The load was applied at a rate of 0.5 inch/minute. This test is also referred to as a pallet bending test using line loads. The load deflection plot was generated for a maximum deflection of 1.25 inch across the span of the pallet. The data is presented graphically.

A similar test is then performed on a new pallet sample using an air bag on the top surface of the pallet and using the same bottom supports as shown in Figure 1. The load is also applied at 0.5 inch/minute. This test is also referred to as a pallet bending test using uniformly distributed loads to simulate warehouse stacking in unsupported racks. The load deflection plot was generated for a maximum deflection of 1.25 inch across the span of the pallet. The data is presented graphically.

A third pallet sample was then loaded with a uniformly distributed load using the flat top and flat bottom platens as shown in Figure 2. A similar load deflection plot was prepared for a maximum load of 30,000 Ibs. The data is also presented graphically.

A fourth pallet sample was then loaded with a concentrated load representing the bases of four 24 inch diameter drums. The load deflection plots of these tests are shown in the attached graph (Similar graphs for the previous tests were provided to Battelle representatives on Friday, April 18, 1997 after tests were conducted). The tests were conducted to 20.000 Ibs.

Dynamic Tests:

2. Vibration Testing of Pallet Loads:

The pallet sample was loaded with a rated load of 3000 Ibs. The load consists of pre-loaded pallet containing dead concrete weights. These were then placed on a electrohydraulic vibration table. A frequency scan was performed from 2 Hz to 100 Hz at a sweep rate of 1 octave

per minute with a constant acceleration of 0.50 g's as recommended in ASTM D-999, Method C. The pallet was tested for a vibration dwell of 180 minutes using the composite truck ride spectrum as described in ASTM D4728. These tests represent the random vibration portion of the test.

3. Lateral Stability and Diagonal Rigidity of the Pallet due to Drops:

The lateral stability of the pallet was also tested. The pallet was dropped from a fixed height of 40 inches. All drops were performed on a Precision Drop Tester as shown in Figure 3 and 4. The pallet was dropped six times. The drop sequence used is recommended in ASTM D1185. This consists of the following:

Number of Drops	**Impact Surface**
Three	Pallet Corner
One	Adjacent Pallet Corner
One	Pallet End Edge
One	Pallet Side Edge

4. Impact Test of Leading Edge. Blocks or Stringers:

The pallets were then subjected to impacts using fork handling equipment in the following sequence using material handling equipment.

Number of Impacts	**Impact Test Condition**
Two	Leading Edge Fork-Heel Impact
Two	Fork Toe Impact (Pallet Legs)
Two	Sluing (Rotate Pallet 90' using Forks)
Two	Leading Edge Deckboard Separation Resistance

The palletized load is handled with normal conditions between each impact sequence.

The pallets are then inspected.

TEST RESULTS:

The pallets were inspected after the various tests. The pallets showed a deformation (permanent set) of approximately 0.25 inches across the mid-span of the two pallet bending tests after the test load was removed. However they recovered back completely to the initial flat configuration after 24 hours.

The pallets passed the static and dynamic load tests at the different load ratings described in each test and the corresponding load deflection plots for specific deflection limits shown.

GENERAL OBSERVATIONS:

The pallets are heavy in weight and would require mechanical handling.

Also the existing design limits the pallets to have only two way access with pallet fork-trucks. However the elimination of two or four pallet deckboards on the bottom will make these also accessible to pallet jacks. A notched stringer would offer four way access with fork trucks. These may be important benefits for mechanical handling of these pallets.

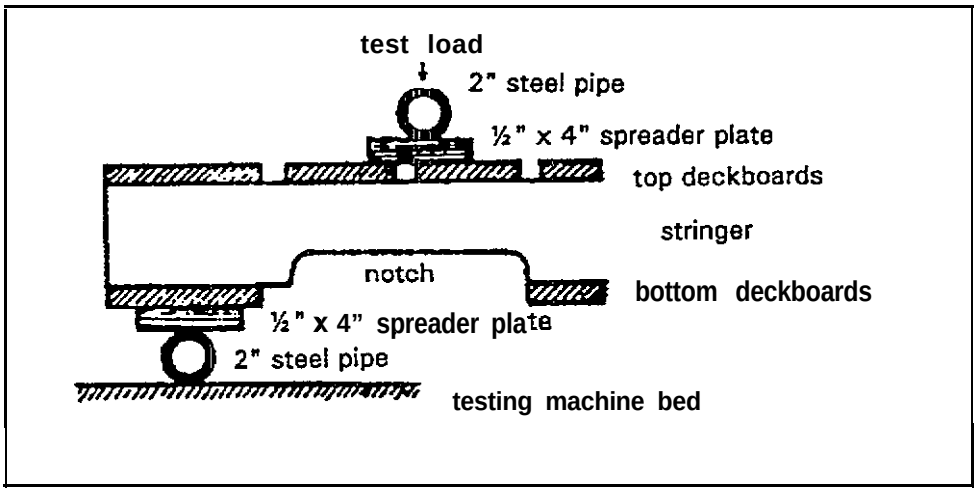

FIGURE 1: Loading and Supporting Details for Pallet to be Tested

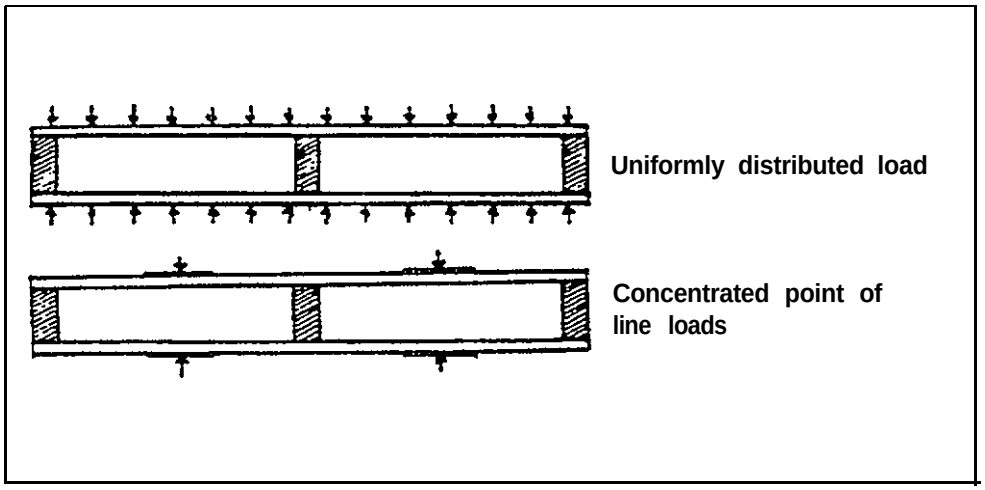

FIGURE 2: Pallet With Uniformly Distributed and Concentrate Point or Line Loads

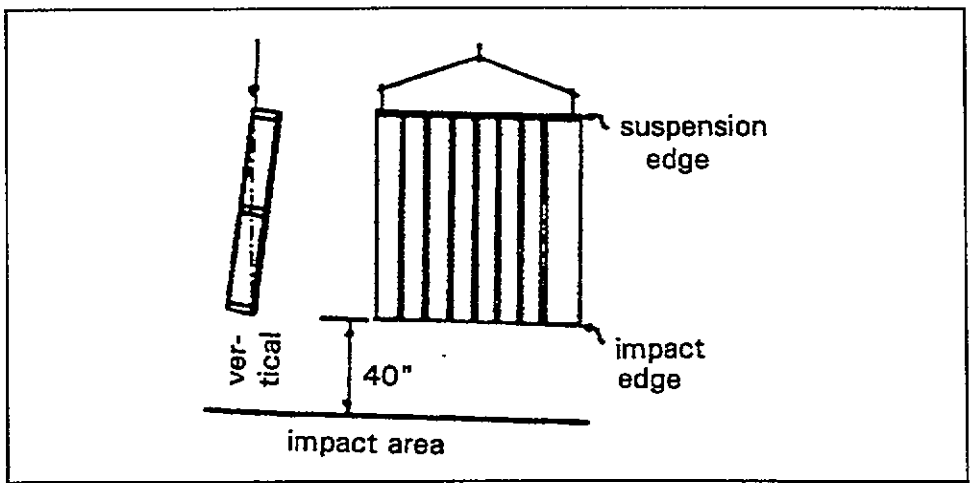

FIGURE 3: Edge Drop

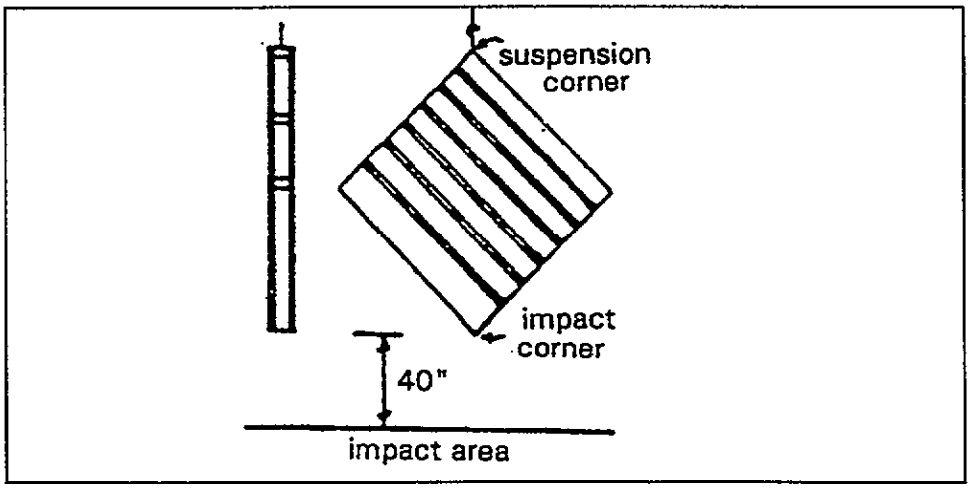

FIGURE 4: Corner Drop

MICHIGAN STATE UNIVERSITY

Sample ID:	Sample #	Peak Force	Def @ Pk	Temp	%RH	Time	Date
BATTELLE, COMPRESSION DRUM SIM	1	20355.9 Lbs	0.98 In	68.68 °F	42.39 %RH	10:41:36	04-22-1997

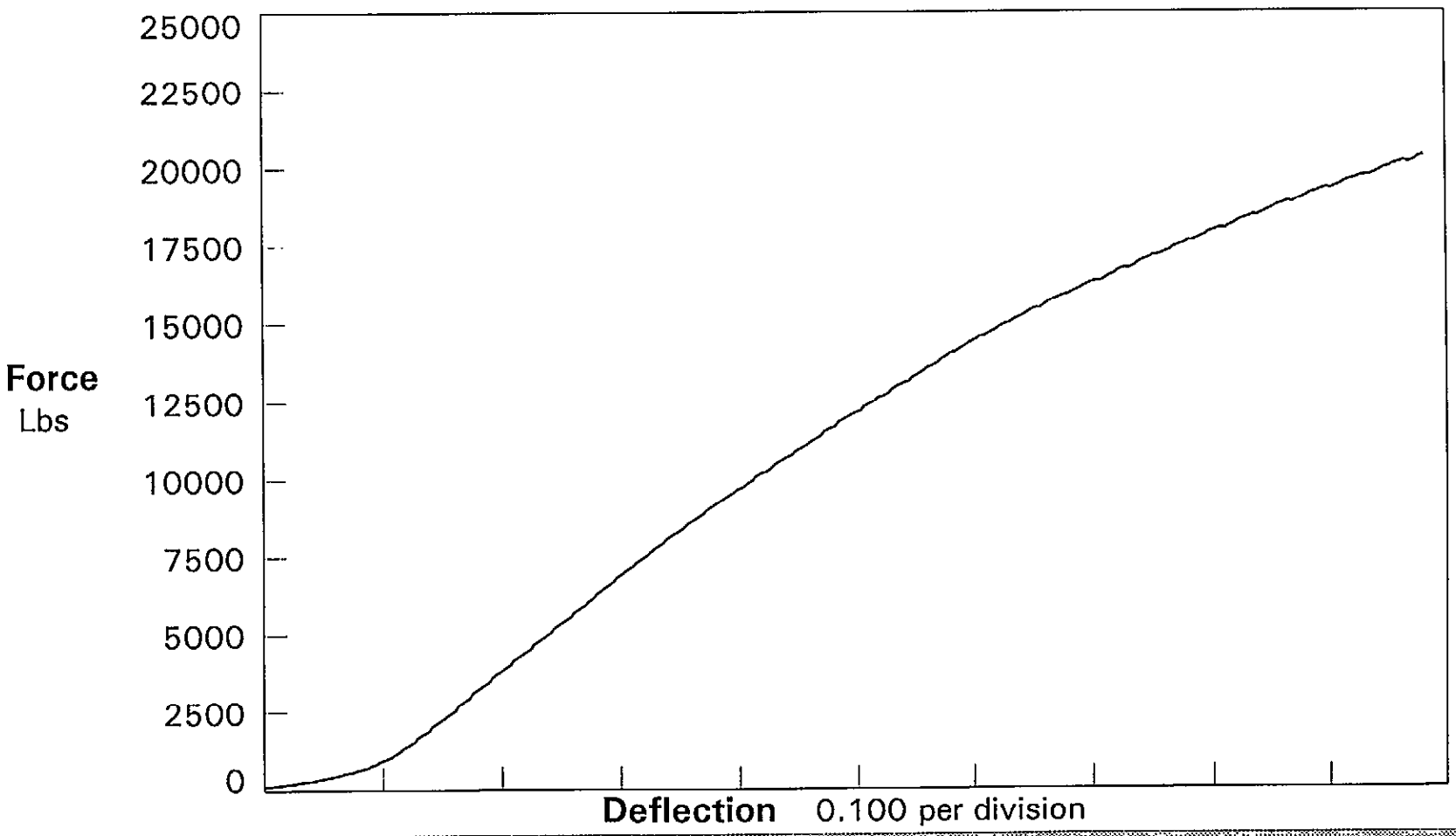

MICHIGAN STATE UNIVERSITY

Sample ID:	Sample #	Peak Force	Def @ Pk	Temp	%RH	Time	Date
BATTELLE, COMPRESSION TEST	1	30341.6 Lbs	0.20 In	67.59 °F	42.94 %RH	07:40:08	04-18-1997

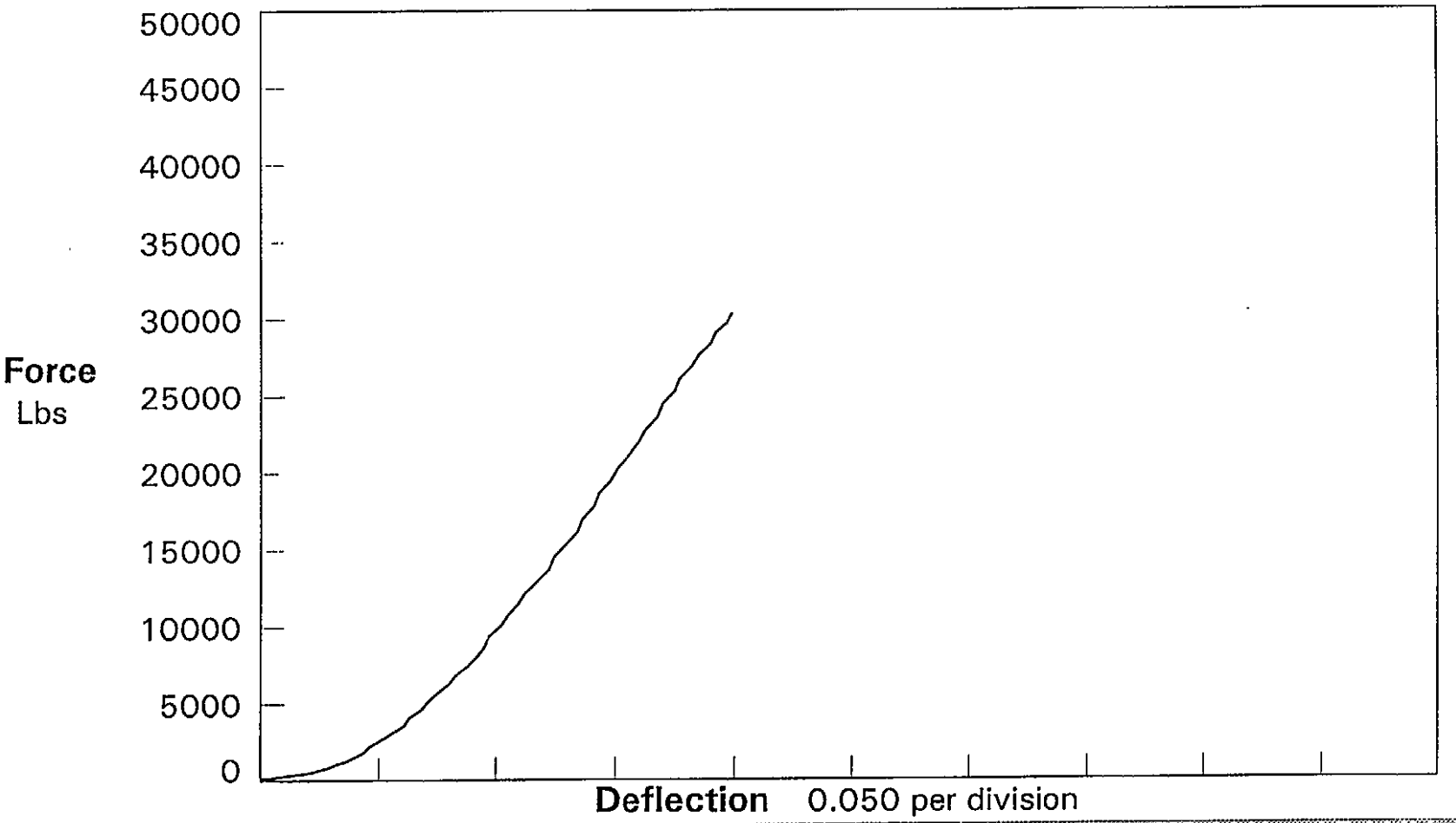

MICHIGAN STATE UNIVERSITY

Sample ID:	Sample #	Peak Force	Def @ Pk	Temp	%RH	Time	Date
BATTELLE, BENDING AIR BAG	1	1856.7 Lbs	1.26 In	68.15 °F	42.97 %RH	07:57:25	04-18-1997

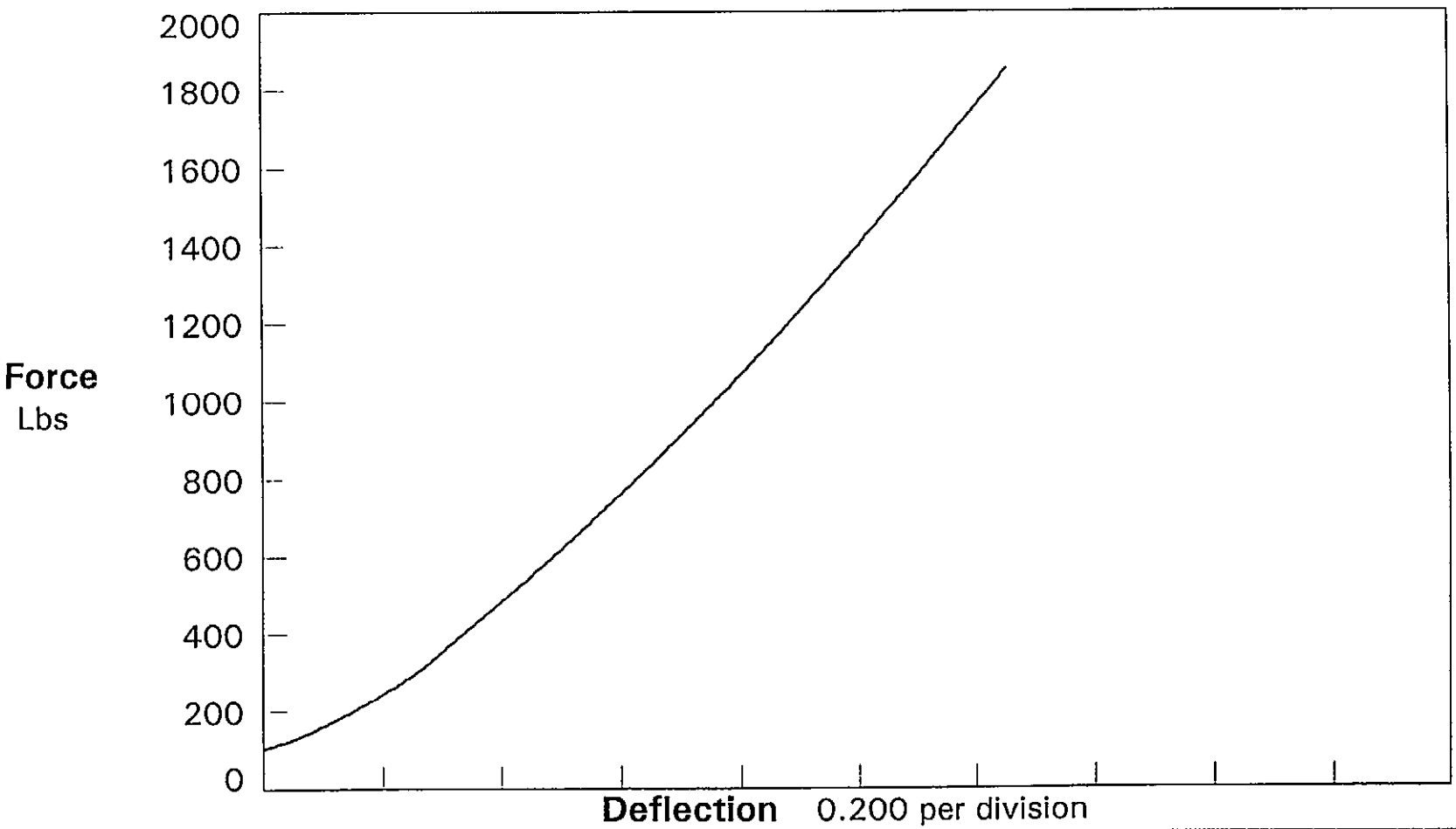

MICHIGAN STATE UNIVERSITY

Sample ID:	Sample #	Peak Force	Def @ Pk	Temp	%RH	Time	Date
BATTELLE, BENDING LINE LOAD	1	5013.2 Lbs	1.26 In	67.85 °F	42.97 %RH	07:48:42	04-18-1997

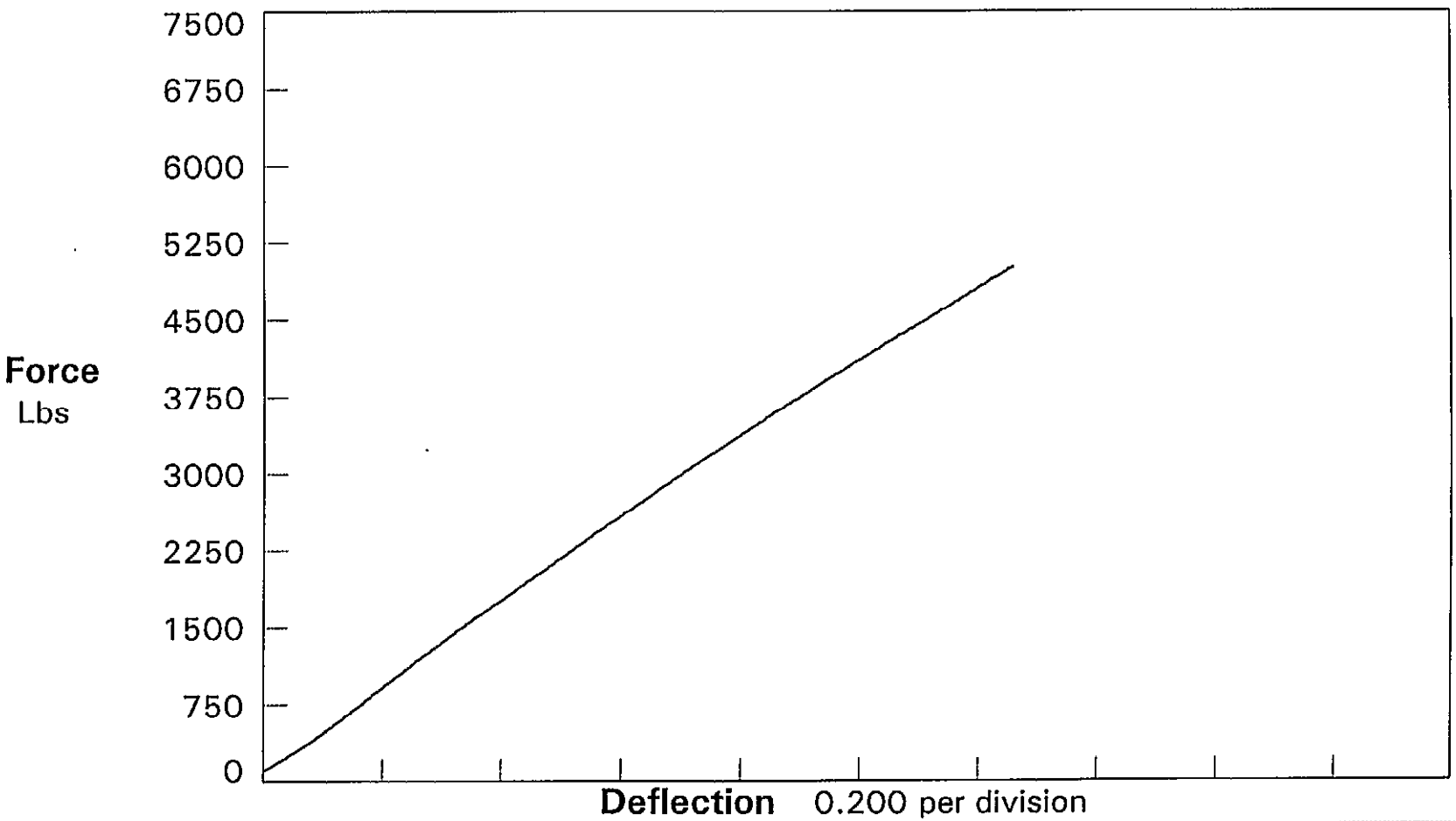

MICHIGAN STATE UNIVERSITY

Sample ID:	Sample #	Peak Force	Def @ Pk	Temp	%RH	Time	Date
BATTELLE, COMPRESSION DRUM SIM	1	20355.9 Lbs	0.98 In	68.68 °F	42.39 %RH	10:41:36	04-22-1997

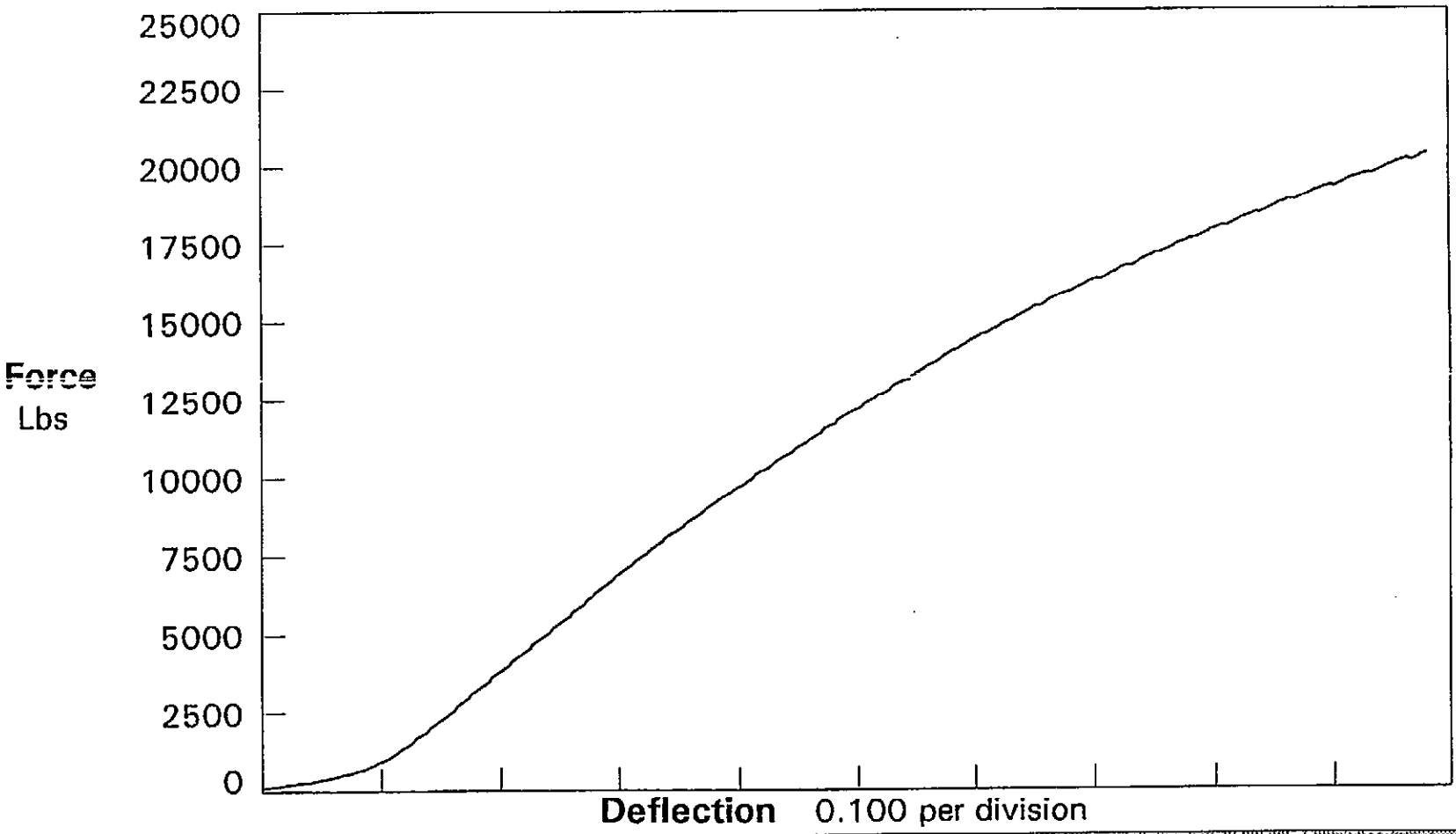

E-13

FAX

April 22, 1997

To: Prahbat Krishnaswamy, BATTELLE

Fax: 614 424 3457

Tel: 614 424 5998

From: Dr. Paul Singh,

Tel: (517) 355-7614 Fax: (517) 353-8999

Number of Pages to Follow: 1

Dear Prahbat,

Attached is the data from the last compression test. I will send you the report later this week.

The pallets also passed the vibration, drop and impact tests performed.

I will be mailing you the invoice for the tests conducted. I do need a purchase order for payment.

Please advise ASAP by voice-mail who do you want these shipped back. Please let us know if you want us to dispose these. We always are in need of space in the lab.

Kind Regards,

Paul Singh

Appendix F

DOE-Fernald Field Evaluation Report on RPL Pallets

Location 1 -Former Production Area
Location 2 -Training Area
Location 3 - Northstar Area

Fernald Environmental Management Project
Pallet Evaluation Criteria - Static Test

The Fernald Environmental Management Project (FEMP) Pallet Evaluation Criteria (PEC) was developed to evaluate Recycled Plastic Lumber (RPL) pallets tested by the Department of Energy (DOE) at it's Fernald site. The inspection criteria was initially developed for inspection of U.S. Postal Service pallets.

The static test evaluation criteria noted below identifies basic observations with respect to the pallets characteristics and its usage. An initial observation will be made prior to placing the pallet in use. A final observation will be made at the conclusion of the static test. Pictures will be taken of each pallet prior to the test and at the conclusion of the test.

ORIGINAL

	Start	Finish
1. Are there any corners damaged or broken?	NO	NO
2. Are any internal support braces damaged or broken?	NO	NO
3. Are there any cracks in the surface of the pallet boards?	NO	NO
4. Are there any cracks that extend through the pallet boards?	NO	NO
5. Does the pallet rest evenly on a level surface?	Yes	Yes
6. Is there any palled desk deformation which adversely affects the load on the pallet?	NO	NO
7. What is the type and characteristics of load placed on the pallet?	P054 (MDC) MAG Flourride STEEL Drums	N/A
6. What is the weight 'of the load?	See Below For Breakdown TOTAL 9006	See Below
9. Are the pallets single or double stacked?	Both	Single *
10. What type of the surface is the pallet placed on?	Concrete	Concrete
11. Is the environment outside or inside?	OUTSIDE	OUTSIDE
12. Date pallet placed into service?	5/15/97	6/16/97
13. Date pallet observed or taken out of service?		6/16/97

- The presence of any lose in pallet integrity during the static test that could potentially result in unsafe usage of the pallet in the DOE environment will result in the test being immediately terminated and the pallet removed from service.

General Observations, Comments & Recommendations						TOTALS
~~DOUBLE~~ * TOP STACK (W)	WT Drum	1) 756	2) 754	3) 764	4) 750	3024
MIDDLE (W)	WT Drum	1) 656	2) 744	3) 800	4) 738	2938
Bottom (W)	WT Drum	1) 726	2) 700	3) 332	4) 756	3014

Top Pallet Removed from use 6/16/97. Sent to Bldg 78 for Free Release. Bottom Two. Pallets will Remain In field.

Assessor: Bruce Davis 4934 Pg. 920-5066

Bruce Davis 6/16/97

Fernald Environmental Management Project
Pallet Handling Evaluation - Dynamic Test

The Fernald Environmental Management Project (FEMP) Pallet Evaluation Criteria (PEC) was developed to evaluate Recycled Plastic Lumber (RPL) pallets tested by the Department of Energy (DOE) at it's Fernald site. The inspection criteria was initially developed for inspection of U.S. Postal Service pallets.

The dynamic test evaluation guidelines noted below identify basic observations with respect to the pallet's characteristics and it usage. Observation will be made on a routine basis during a six week trial period for the pallet testing. Pictures will be taken of each pallet prior to the test and at the conclusion of the test. A final evaluation will be made at the conclusion of the dynamic testing.

The presence of any lose in pallet integrity during the dynamic test that could potentially result in unsafe usage of the pallet in the DOE environment will result in the test being immediately terminated and the pallet removed from service.

Observations - Pallet Handling

Observer: Date:

Observation time for pallet handling (month/day/year):	MAY/JUNE 1997
Site/location characteristics (asphalt, gravel, soil):	CDL TRAINING SITE/ASPHALT
Pallet handling equipment types & characteristics:	FORK TRUCK
Trailer characteristics (type, height, etc.):	TRAILERS USED FOR TUGGING ON SITE
Type of pallet-handling operations:	
Load/Unload (truck/trailer)	LOAD AND UNLOAD
Repositioning (dragging/pushing)	DRAGGING AND PUSHING ACTIVITY ALMOST ON A DAILY BASES
Other (explain)	DRUMS WHERE UNSTACKED AND RESTACKED, USING LIFT-O-MATIC EQUIPMENT

F-2b

Load characteristics:	
Pallet only?	VERY SATISFACTORY
Pallet loaded?	HANDLES VERY WELL
Type of load?	DRUMS
Load blocked?	NO
Load strapped?	YES
Average height of pallet load:	4½'
Estimated load weight:	2,000 LBS
Loading/Unloading Procedures	
Stacks or individual pallets?	STACKS + INDIVIDUAL
Loads adjusted with fork tines prior to insertion?	SOMETIMES NECESSARY
Loads adjusted manually prior to insertion?	SOMETIMES NECESSARY
Are side shifters used?	NO
Side entry (48" side) or end entry (40' side)?	48" side
Loads dragged or pushed on truck bed?	YES, FOR ADJUSTMENT
Loads tilted before transport?	YES
Truck sides, top, or bed struck or scraped?	DRUMS ONLY
Loads dragged or pushed on dock?	YES - ON ASPHALT
Loads dropped?	NO
Loads stacked in staging area?	YES. PRACTICE STACKING
Stack heights - # of pallets, height in feet?	WITH DRUMS/2 PALLETS 9 FT.
Stack weight?	4000 LBS.

Comments:

PALLETS SEEM TO VERY STRONG AND DURABLE, EASY TO MOVE AND STACK WITH A FORK TRUCK. BOTTOMS OF SKIDS SHOW LITTLE OR NO WEAR AT ALL. NO WEAKNESSES NOTED AT ALL.

Post-it® Fax Note 7671	Date 5/19	# of pages ▶ 2
To PETE BRANUM	From ALISA RHODES	
Co./Dept. TRANS. TRAINING	Co.	
Phone # 5705	Phone # 4968	
Fax # 5746	Fax #	

Fernald Environmental Management
Pallet Handling Evaluation - Dynamic **test**

The Fernald Environmental Management Project (FEMP) Pallet Evaluation Criteria (PEC) was developed to evaluate Recycled Plastic Lumber (RPL) pallets tested by the Department of Energy (DOE) at it's Fernald site. The inspection criteria was initially developed for inspection of U.S. Postal Service pallets.

The dynamic test evaluation guidelines noted below identify basic observations with respect to the pallet's characteristics and it usage. Observation will be made on a routine basis during a six week trial period for the pallet testing. Pictures will be taken of each pallet prior to the test and at the conclusion of the test. A final evaluation will be made at the conclusion of the dynamic testing.

The presence of any lose in pallet integrity during the dynamic test that could potentially result in unsafe usage of the pallet in the DOE environment will result in the test being immediately terminated and the pallet removed from service.

Observations - Pallet Handling Observer:	Date:
Observation time for pallet handling (month/day/year):	5/97
Site/location characteristics (asphalt, gravel, soil):	TRAING SITE/ASPHALT
Pallet handling equipment types & characteristics:	9000 LB. FORK TRUCK
Trailer characteristics (type, height, etc.):	N/A
Type of pallet-handling operations:	
Load/Unload (truck/trailer)	LOAD & UNLOAD
Repositioning (dragging/pushing)	BOTH
Other (explain)	DOUBLE STACKING

Load characteristics:	
Pallet only?	yes
Pallet loaded?	yes
Type of load?	DRUMS
Load blocked?	N/A
Load strapped?	yes
Average height of pallet load:	38"
Estimated load weight:	2000 LBS.
Loading/Unloading Procedures	
Stacks or individual pallets?	BOTH
Loads adjusted with fork tines prior to insertion?	yes
Loads adjusted manually prior to insertion?	NO
Are side shifters used?	NO
Side entry (48" side) or end entry (40' side)?	48"
Loads dragged or pushed on truck bed?	yes
Loads tilted before transport?	yes
Truck sides, top, or bed struck or scraped?	NO
Loads dragged or pushed on dock?	yes / ON ASPHALT
Loads dropped?	NO
Loads stacked in staging area?	yes
Stack heights - # of pallets, height in feet?	2 PALLETS - 6½'
Stack weight?	4000 LBS

Comments:

PALLETS SLIPPERY DRY OR WET

F-3a

JERRY BARAUA

Fernald Environmental Management Project
Pallet Handling Evaluation - Dynamic Test

The Fernald Environmental Management Project (FEMP) Pallet Evaluation Criteria (PEC) was developed to evaluate Recycled Plastic Lumber (RPL) pallets tested by the Department of Energy (DOE) at it's Fernald site. The inspection criteria was initially developed for inspection of U.S. Postal Service pallets.

The dynamic test evaluation guidelines noted below identify basic observations with respect to the pallet's characteristics and it usage. Observation will be made on a routine basis during a six week trial period for the pallet testing. Pictures will be taken of each pallet prior to the test and at the conclusion of the test. A final evaluation will be made at the conclusion of the dynamic testing.

The presence of any lose in pallet integrity during the dynamic test that could potentially result in unsafe usage of the pallet in the DOE environment will result in the test being immediately terminated and the pallet removed from service.

Observations - Pallet Handling	
Observer:	Date:
Observation time for pallet handling (month/day/year):	4 97
Site/location characteristics (asphalt, gravel, soil):	NORTHSTAR - CON-CRETE FLOOR
Pallet handling equipment types & characteristics:	FORK TRUCK
Trailer characteristics (type, height, etc.):	
Type of pallet-handling operations: FOR CHAIRS, BOXES, CABINET,	
Load/Unload (truck/trailer)	
Repositioning (dragging/pushing)	
Other (explain) This pallet FOR this LOCATION - because we use RACKS and that our RACK because we have L. DOCK at Northstar.	NOT A GOOD PLACE kid is to LARGE for ted room only lose

F-3b

Load characteristics:	
Pallet only? YES	The month of
Pallet loaded? YES	MAY 97
Type of load? STACK with BOXES	
Load blocked? NO	
Load strapped? NO	
Average height of pallet load: 4'	
Estimated load weight: 80Lb.	
Loading/Unloading Procedures	
Stacks or individual pallets? NO	The month of
Loads adjusted with fork tines prior to insertion? NO	MAY 97
Loads adjusted manually prior to insertion? NO	
Are side shifters used? NO	
Side entry (48" side) or end entry (40' side)?	
Loads dragged or pushed on truck bed? NA	
Loads tilted before transport? NA	
Truck sides, top, or bed struck or scraped?	
Loads dragged or pushed on dock? pushed sometime on floor	
Loads dropped? Skid dropped to be testest	
Loads stacked in staging area? NO	
Stack heights - # of pallets, height in feet? NO	
Stack weight? NO	
Comments:	

Fernald Environmental Management Project
Pallet Handling Evaluation - Dynamic Test

The Fernald Environmental Management Project (FEMP) Pallet Evaluation Criteria (PEC) was developed to evaluate Recycled Plastic Lumber (RPL) pallets tested by the Department of Energy (DOE) at it's Fernald site. The inspection criteria was initially developed for inspection of U.S. Postal Service pallets.

The dynamic test evaluation guidelines noted below identify basic observations with respect to the pallet's characteristics and it usage. Observation will be made on a routine basis during a six week trial period for the pallet testing. Pictures will be taken of each pallet prior to the test and at the conclusion of the test. A final evaluation will be made at the conclusion of the dynamic testing.

The presence of any lose in pallet integrity during the dyamic test that could potentially result in unsafe usage of the pallet in the DOE environment will result in the test being immediately terminated and the pallet removed from service.

Observations - Pallet Handling

Observer: COLUMBUS HENDERSON **Date:** 06/13/97

Observation time for pallet handling (month/day/year):
I OBSERVE this SKid FOR 3 mo. And AISO WORK with it But here at NORTHSTAR WE this SKid is to LARGE FOR

From the time we had 3-97 this is what I did OR OBSERVER doing wi: What we do here.

Site/location characteristics (asphalt, gravel, soil):
NORTHSTAR WEARHOUSE we have CONCRETE FLOOR. I AISO PUSH over the Floor it did very well I drop it And it Stood the Test.

Pallet handling equipment types & characteristics:
FORKTRUCK RAN by LP hard tires Type TRUCK

Trailer characteristics (type, height, etc.):
N/A

Type of pallet-handling operations:
WEARHOUSE With OFFICE EQU. DESK, CHAIRS, tables, BOOK CASES,

Load/Unload (truck/trailer)

Repositioning (dragging/pushing)

Other (explain)

Load characteristics:

Pallet only?

Pallet loaded? OK for something such as Book cases, tables, ~~[illegible]~~ Boxes

Type of load? Table, Boxes, motors, scrap,

Load blocked? N/A

Load strapped? N/A

Average height of pallet load: 40" to 65"

Estimated load weight: 70 to 75 Lb

Loading/Unloading Procedures

Stacks or individual pallets? Individual Skid

Loads adjusted with fork tines prior to insertion? mask Adjusted

Loads adjusted manually prior to insertion? sometime

Are side shifters used? NO

Side entry (48" side) or end entry (40' side)? end to end

Loads dragged or pushed on truck bed? N/A

Loads tilted before transport? some time tilted And sometime Not tilt

Truck sides. top. or bed struck or scraped? N/A

Loads dragged or pushed on dock? push on floor sometime

Loads dropped? NO skid dropped to test it

Loads stacked in staging area? YES when we use it.

Stack heights - # of pallets. height in feet? N/A

Stack weight? N/A

Comments: This skid or pallet is very good in the way I tested it But I dont beleive that this skid would be best use out here for what we do. one it is to large to place in the rack we use here.

Appendix G

Radiological Survey of RPL Pallet Prior to Authorized-Release

63175

FEMP

COVER SHEET

DOCUMENT TYPE ● RSR ○ RWP ○ ASR

SURVEY FOR RWP? ○ YES ● NO

NAME Sam Homsher

PAGE 1 OF 2

SIGNED S. Homsher

LOCATION Bldg. 78

LOCATION CODE

BADGE # 70522

DATE 06/27/97

TIME 10:40

BLDG/GRID# 78

FLR 1

SURVEY NUMBER 97-06-02-0279

RWP NUMBER

COMMENTS Release survey for a new style plastic pallet. N/A

REVIEWER	BADGE
DWeber	10324
SIGNATURE	DATE
DWeber	6-27-97

FOR INFORMATION ONLY

FS-F-4617 (REV. 1 5/30/96)

FEMP

MATERIAL UNRESTRICTED RELEASE FORM

SURVEY # 97-06-02-279

DATE:	LOCATION:	RCT (PRINT):	SIGNATURE:	BADGE #:
06-27-97	Bldg. 78	S Homsher	S. Homsher	70522

MODEL	SERIAL NUMBER	TYPE ALPHA or BETA/GAMMA	CAL DUE DATE	BKGD (CPM)	CF	MDA (DPM)	INST. PERFORMANCE TEST SAT? YES	NO
M-3	77174	BY	8-97	100	39/4	3000/400	✓	N
N	N	N	N	N	N	N	N	A
A	A	A	A	A	A	A	A	

TIME	RCT INITIAL	MATERIAL DESCRIPTION	RELEASE CRITERIA SURF or VOL	RESULTS ALPHA REMOVABLE	ALPHA FIXED + REM	BETA/GAMMA REMOVABLE	BETA/GAMMA FIXED + REM	RELEASE JUSTIFICATION	RECIPIENT	MATERIAL RELEASE EVALUATOR BADGE # and SIGNATURE (1)
1040	SH	Plastic Pallet-Top Bottom Sides I/S	Surf	N/A	N/A	<MDCR	<MDCR	RP-0009	Fred Mears	N A
	N	N	N	N	N	N	N	N	N	N
A		A	A	A	A	A	A	A	A	A

Comments N/A

REVIEW: INITIAL [signature] DATE 6-27-97

(1) Material Release Evaluator approval required in accordance with RP-0009, Radiological Requirements for the Release of Materials at the Fernald Environmental Management Project, if any of the following conditions exist:

a. Material has potential for contamination in areas which are inaccessible for proper survey.
b. Process knowledge is used to support the release decision.
c. Material has potential of contamination beneath any coating applied while the material was in the Controlled Area.
d. Material has potential for volume or in-depth radioactivity within the material matrix.
e. Special case items are being released, such as radioactive consumer products, industrial sources, etc.
f. *Material has detectable activity present and the activity is below the contamination limits listed in Attachment A of RP-0009.*

FS-F-3915-1 (REV. 01/29/97)

Appendix H

Details of the Multi-Attribute Analysis

Performance Measures	Alternatives Galvanized Steel	RPL	Fernald Weighting Factors	Max	Min	Difference
LCC	538	608	10	673	538	135
Schedule Impacts			1.5			0.00
Local Economic Impacts			5			0.00
Institutional Preference	4	5	15	5.00	1 .00	4.00
Local Public Acceptance	3	5	30	5.00	1 .00	4.00
Environmental Impact	2	5	25	5.00	1 .00	4.00
Worker Safety	5	5				0.00
[Overall Score for the Alternative	42.50	74.80				

Normalize the Scores:

	Steel	RPL
NPV	1 .00	0.48
Schedule		
Local Economic Impacts		
Institution	0.75	1
Local Soci	0.5	1
Environm	0.25	1

Notes:

Fernald has not provided a weighting factor for worker safety. However because both alternatives have the same score on worker safety, this does not affect the result.

LCC is normalized on a range of 538 (the lowest cost alternative) to 25% more than 538 (673), with lower values being preferred. Thus, the weighting factor for NPV is assumed to represent the worth of reducing the cost from $673 to $538.

It is assumed that there is no difference between the alternatives on schedule or local economic impacts.

The weighting factors for institutional preference, local public acceptance, and environmental impact are assumed to represent the worth of moving from a score of 1 to a score of 5, with higher values being preferred.